AN ANALYTICAL SOLUTION FOR THE STREAM-AQUIFER INTERACTION PROBLEM

A. M. Wasantha Lal
Lead Engineer, Hydrologic Systems Modeling Division, South Florida Water Management District.

ABSTRACT

An analytical solution is obtained for the simplified transient stream-aquifer interaction problem using Fourier analysis and complex variables. The solutions obtained for small sinusoidal water level disturbances of different periods are used to identify a number of dimensionless parameter groups that influence the solution. The analytical solutions are compared to numerical solutions obtained using the MODFLOW model (McDonald and Harbough, 1998). The dimensionless parameter groups combining the canal, aquifer and sediment properties are used to understand how they affect the stream-aquifer interaction. The analytical solution is useful in verifying the accuracy of computer models simulating stream-aquifer interaction.

INTRODUCTION

A significant part of the South Florida landscape is covered with a network of canals that extend to thousands of miles covering wetland, agricultural and urban areas. The behavior of water levels in the canals and the adjacent areas when subjected to water level disturbances in the canals is not completely understood. The highly conductive aquifer system in South Florida, and the presence of a sediment layer in some canals have added to the complexity of the problem. The current study is aimed at understanding the parameters that govern the problem, and obtaining an approximate analytical solution.

Stream-aquifer and stream-wetland interactions have previously been studied by a number of researchers. The study by Pinder and Sauer (1971) was carried out using coupled numerical models for canal flow and groundwater flow. The example usedby them served as a benchmark test problem for integrated models such as MODBRANCH (Swain and Wexler, 1996). In these models, the MODFLOW model is coupled with a model simulating canal networks.

GOVERNING EQUATIONS

Equations governing 2-D groundwater flow, 1-D canal flow and resistance to flow across any sediment layer are needed to solve the problem. The equation governing unsteady flow in a 2-D isotropic confined aquifer is

$$s_c \frac{\partial H}{\partial t} = \frac{\partial}{\partial x}\left(K_g \frac{\partial H}{\partial x}\right) + \frac{\partial}{\partial y}\left(K_g \frac{\partial H}{\partial y}\right) \tag{1}$$

subjected to suitable initial and boundary conditions. In the equation, $x, y =$ distances along horizontal x and y axes; $t =$ time; $H =$ water head in the case of groundwater flow; $K_g =$ transmissivity of the aquifer; $s_c =$ storage coefficient; $K_g \approx k_g h$ where $k_g =$ hydraulic conductivity and $h =$ aquifer thickness for unconfined flow. After neglecting the inertia terms, St Venant equations for a 1-D wide rectangular canal are given by

$$\frac{\partial h}{\partial t} + \frac{\partial q}{\partial x} - q_l = 0 \tag{2}$$

$$\frac{\partial h}{\partial x} + S_f - S_0 = 0 \tag{3}$$

in which, $h =$ water level in the canal; $q =$ discharge rate in the canal per unit width; $q_l =$ total leakage into the canal per unit length per unit width of the canal; $S_0 =$ bottom slope. Friction slope S_f can be explained using the following general expression:

$$S_f = C\frac{u^n}{h^m} = C\frac{q^n}{h^{m+n}} \tag{4}$$

in which, $u =$ flow velocity; $C =$ roughness constant; $m, n =$ constants. Equation (4) can be used to represent Manning's equation using $n = 2$, $m = 4/3$. Leakage between the canal and the aquifer per unit length of the canal per unit width q_l is computed using the water surface slope in the aquifer at the aquifer-sediment interface (Fig. 1). When there is a sediment layer of conductivity k_m present, the equation for leakage can also be written using these parameters.

$$q_l = \frac{2K_g}{B}\left(\frac{\partial H}{\partial y}\right)_{y=\delta+} = k_m \frac{\delta}{\Delta H} \approx \frac{2K_m}{B}\left(\frac{\partial H}{\partial y}\right)_{y=\delta-} \tag{5}$$

in which, $B =$ width of the canal; $\delta =$ thickness of the sediment layer when a sediment layer is present; $\Delta H =$ head loss across the sediment layer. A transmissivity K_m computed using $K_m \approx 0.5Bk_m$ is used to express sediment characteristics. A solution is obtained for the governing equations (1), (3) and (5) assuming that the canal has a uniform cross section, and is sloping in the downstream direction. The canal extends to infinity in the downstream direction, and the aquifer is semi-infinite. Perturbation equations are generated by setting the governing equations to $H = H_0$, $h = h_0$ and $q = q_0$ as well as slightly perturbed solutions $H = H_0 + H^*$, $h = h_0 + h^*$ and $q = q_0 + q^*$. The perturbation equations can be solved using the following substitutions.

canal: $$h^*(x,t) = h' \exp\{(ft + \lambda x)\} \tag{6}$$

sediment: $$H^*(x,y,t) = h' \exp(ft + \lambda x + \theta y\} \quad \text{for} \quad 0 < y \le \delta \tag{7}$$

aquifer: $$H^*(x,y,t) = h' \exp(ft + \lambda x + \theta\delta + \mu(y - \delta)\} \quad \text{for} \quad y > \delta \tag{8}$$

in which f, λ, μ, and θ are complex constants. Once these solution forms are substituted in the perturbed equations, the condition for the canal flow equations to have a nontrivial solution in $[h', q']$ can be determined. This condition is expressed as (Ponce and Simons, 1978).

$$\left\{ f - \frac{2K_g}{B}\mu \exp\left(\frac{K_g}{K_m}\mu\delta\right) \right\} \frac{S_f n}{q_0} = \lambda \left\{ \lambda - (m+n)\frac{S_f}{h_0} \right\} \tag{9}$$

Equations (1) and (9) can be expressed in the following dimensionless forms.

$$P_r(\hat{\lambda}^2 + \hat{\mu}^2) = \hat{f} \tag{10}$$

$$\hat{\lambda}^2 - \frac{\hat{\lambda}}{P_d} + \frac{2\hat{\mu}P_r}{P_b}\exp\left(\frac{P_r\hat{\mu}}{P_m}\right) = \hat{f} \tag{11}$$

The dimensionless parameters used are defined as

$$P_r = \frac{K_g}{s_c f_r \Lambda^2} = \frac{nK_g S_f}{s_c q_0} = \frac{nK_g}{s_c K_c} \tag{12}$$

$$P_b = \frac{B}{\Lambda s_c} \tag{13}$$

$$P_d = \frac{h_0}{(m+n)S_f \Lambda} \tag{14}$$

$$P_m = \frac{K_m}{\delta f_r \Lambda s_c} = \left(\frac{k_m}{\delta}\right)\left(\frac{1}{f_r}\right)\left(\frac{B}{\Lambda}\right)\left(\frac{1}{s_c}\right) \tag{15}$$

The following additional equation is used to simplify the presentation of results.

$$\chi = \frac{P_b}{\sqrt{P_r}}\exp\left(-\frac{\sqrt{P_r}}{P_m}\right) \qquad \text{with a sediment layer} \tag{16}$$

$$\chi = \frac{P_b}{\sqrt{P_r}} \qquad \text{with no sediment layer} \tag{17}$$

and Λ is defined as

$$\Lambda = \sqrt{\frac{q_0}{nS_f f_r}} \approx \sqrt{\frac{K_c}{n f_r}} \tag{18}$$

K_c is an equivalent canal transmissivity defined as $K_c = \frac{q}{S_f}$. Equations (10) and (11) describe the behavior of small water level disturbances in the canal. Real and complex components of $\hat{\lambda}$ and $\hat{\mu}$ describe the exponential decay constant for spatial decay and the wave number respectively. Real and complex components of $\hat{f}$ explain the exponential time decay constant and the frequency in the aquifer and the canal respectively. It can be shown that when $\frac{P_m}{\sqrt{P_r}} < \frac{1}{3}$, water level disturbances in the aquifer are relatively insulated from canal.

NUMERICAL EXPERIMENTS

The analytical solution obtained earlier is compared with numerical solutions obtained using a single layer 2-D MODFLOW model. A 50 km $\times$ 50 km square mesh with 1000 m $\times$ 1000 m cells representing the confined aquifer was used with canal and sediment layers of different widths and conductivities. In the experiments, water level at the upstream boundary of the horizontal canal was varied sinusoidally. The upstream amplitude was maintained at 1.0 m, and an aquifer depth of 50.0 m was used. The exponential decay constant ($\hat{\lambda}_1$ = Real($\hat{\lambda}$) of the amplitude was investigated for different parameter values. Figures 2, 3 and 4 show the comparisons of MODFOW and analytical solutions.

SUMMARY AND CONCLUSIONS

The diffusion flow equations coupled with two dimensional groundwater flow equations were solved analytically for small amplitude water level fluctuations. A number of test simulations were carried out using the MODFLOW model and results were compared with the analytical solution. Results show that the analytical and numerical solutions are in close agreement.

Using the coupled equations and the solution, it is possible to show that three dimensionless parameter groups describing canal depth (P_d), canal width ($P_b/\sqrt{P_r}$), and sediment transmissivity ($P_m/\sqrt{P_r}$) can describe the characteristics of the solution. The results of the study are useful in identifying the conditions under which the stream-aquifer interaction is significant, and the sediment layer act as an insulator between the canal and the aquifer.

ACKNOWLEDGEMENTS

The writer wishes to thank Mark Belnap of the Hydrologic System Modeling Division of the South Florida Water Management District for assisting in the MODFLOW runs, and Vic Kelson, Jayantha Obeysekera, Randy van Zee and others for making valuable comments.

REFERENCES

Lal, Wasantha, A. M. (2000) Numerical errors in groundwater and overland flow models, accepted by *Water Resources Research.* (Please find the paper in http://www.sfwmd.gov under Major Projects/Hydrologic Modeling/Publications)

McDonald and Harbaugh (1988). A modular three dimensional finite-difference groundwater model *US Geological Survey Techniques of Water Resources Investigations Report*, Book 6, Chapter A1, p-576.

Pinder, G. F. and Sauer, S. P. (1971) Numerical simulation of flood wave modification due to bank storage effects, *Water Resources Research*, 7 (2), 63-70.

Ponce, V. M., Li, Ruh-Ming, Simons, D. B. (1978) ”Applicability of kinematic and diffusion models”, *Journal of the Hydraulics Division*, ASCE, 104(3), 353-361.

Swain, E. D. and Wexler, E. J. (1996) ”Techniques of water resources investigations of the USGS”, Chapter A6, A coupled surface-water and ground-water flow model

(MODBRANCH) for simulation of stream-aquifer interaction", USGS, Government Printing Office, Washington DC.

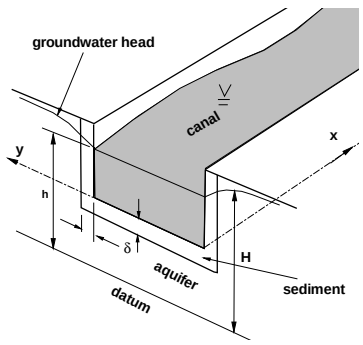

Figure 1: A schematic diagram of the aquifer with a sediment layer

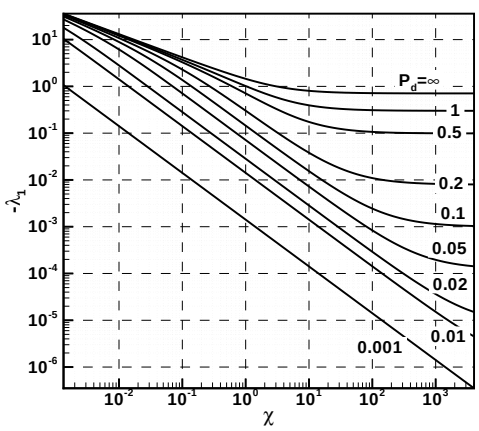

Figure 2: Variation of $-\hat{\lambda}_1$ with χ obtained using the analytical solution

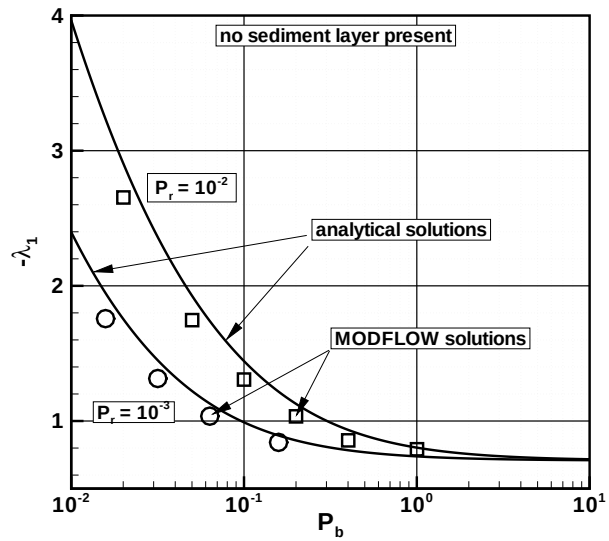

Figure 3: Comparison of the variation of $-\hat{\lambda}_1$ with P_b obtained using the analytical method and MODFLOW for $P_r = 0.01$, and no sediment layer

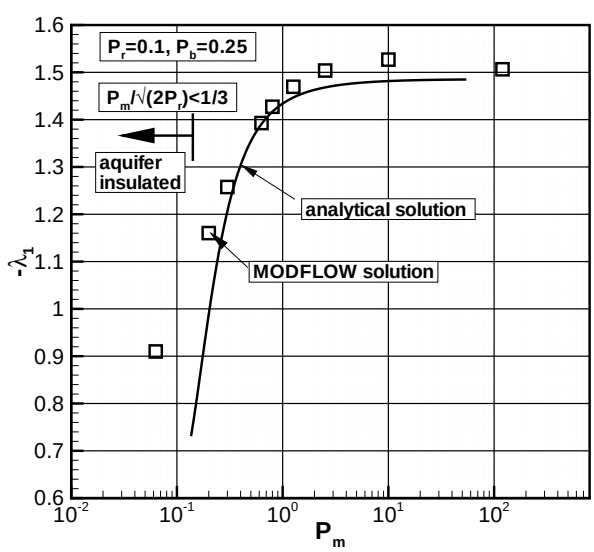

Figure 4: Comparison of the variation of $-\hat{\lambda}_1$ with P_m obtained using the analytical method and MODFLOW model for $P_r = 0.1$, $P_b = 0.25$, $B = 630$ m, and a 20.0 m sediment layer.