South Florida Water Management District

Contract C-E008 A3

Desktop Evaluation of Alternative Technologies Final Report

August 1996

PEER Consultants, P.C./
BROWN and CALDWELL
Joint Venture

PEER Consultants, P.C.
BROWN and CALDWELL

1818 South Australian Avenue, Suite 104
West Palm Beach, Florida 33409

(407) 684-3456 Fax (407) 684-9902

August 13, 1996

Ms. Maria Clemente
Ecosystem Restoration Department
South Florida Water Management District
3101 Gun Club Road
West Palm Beach, Florida 33416

Subject: **Contract C-E008-A3**
Final Report--Desktop Evaluation of
Treatment Technology Alternatives 3807-01

Dear Ms. Clemente:

Attached are twenty five bound copies and one unbound original copy of the draft report documenting work completed by PEER Consultants, P.C./Brown and Caldwell on the Desktop Evaluation of Treatment Technology Alternatives. The final report is being submitted in partial fulfillment of Amendment 3 to Contract C-E008, dated March 4, 1996.

Work on the Desktop Evaluation of Treatment Technology Alternatives was initiated with a review of the treatment technologies considered by Brown and Caldwell in 1992 and 1993 as part of the Everglades Protection Project (Contract C-3051) and a computerized literature search to identify new and developing technologies worldwide for the removal of phosphorus from stormwater. A total of 30 potentially applicable technologies were identified through this process. Six of these were eliminated through a preliminary screening process, leaving 24 technologies to be evaluated formally. The results of the literature search and preliminary screening analysis are presented in Appendix B of this draft report.

The 24 treatment technology alternatives carried forward were first subjected to a formal screening evaluation during which each technology was analyzed and then rated against a list of eight economic and non-economic evaluation criteria. The results of the technology screening evaluation were reviewed with representatives of the District, the Florida Department of Environmental Protection (FDEP) and the Army Corps of Engineers. Based upon these results, the original list of 24 technologies was reduced to 7 for more detailed evaluation. The results of the technology screening evaluation are summarized in Chapter 2 and fully documented in Appendix C of this report.

After the screening evaluation was completed, the remaining seven treatment technologies were used, either individually or in combination with one another, to create a total of eleven treatment trains. These results are summarized in chapter 4. Treatment units within each treatment train were sized to achieve effluent phosphorus concentrations ranging from 50 ppb to 10 ppb beginning with influent phosphorus concentrations of 150 ppb and 90 ppb. Iterative present worth cost computations were made to identify the least cost approach to satisfying the desired phosphorus reduction goal for each treatment train, taking into account capital cost, O&M cost, equipment replacement cost and salvage value. In all, over 400 separate present worth cost computations were completed in carrying out the analysis. Chapter 3 describes the methodologies used to size and cost the various components of the treatment trains.

In addition to the economic analyses performed, projections of effluent water quality were also made for each treatment train to provide information that may be useful in assessing potential impacts on downstream water quality. The treatment trains were also evaluated, in a broad sense, with respect to a number of other non-economic issues, such as permittability and consistency with the policies and standards set forth in the Everglades Forever Act and the Federal Consent Decree.

Chapter 5 provides several analyses focused on defining the sensitivity of the present worth cost figures to STA sizing, P removal in a flow equalization basin, changes in discount rate and changes in salvage value.

The results contained herein are the product of careful analysis of the best available information. We believe it will provide a valuable tool to the District for years to come. If you have any questions or require additional information regarding the work performed, please do not hesitate to call me at (561) 684-3456.

Sincerely,

PEER CONSULTANTS, P.C./BROWN AND CALDWELL

Daniel P. Clark, P.E.
Project Manager

DPC:lf

Attachments

cc: Tom Kozier, South Florida Water Management District
Lilian Abron, PEER Consultants, P.C.
Zack Fuller, Brown and Caldwell
File

F:\3807\FNLRPT\lmCOVR

South Florida Water Management District

Contract C-E008 A3

Desktop Evaluation of Alternative Technologies Final Report

August 1996

PEER Consultants, P.C./
BROWN and CALDWELL
Joint Venture

TABLE OF CONTENTS

SECTION **PAGE**

Table of Contents i
List of Tables iv
List of Figures vi
Chapter 1 Introduction
Background 1-1
Purpose 1-2
Scope of Work 1-2
Report Organization 1-3
Chapter 2 General
Preliminary Analysis and Screening 2-1
Establishment of Selection/Screening Criteria 2-1
Desktop Selection of Alternative Technologies 2-2
Screening of Alternative Treatment Technologies 2-4
Technology Evaluation Methodology 2-4
Criterion Application 2-6
Results of Technology Screening 2-8
Summary of Technology Ratings 2-11
Technologies Selected for Further Evaluation 2-14
Chapter 3 Methodology
Economic Analyses 3-1
Economic Analysis Process 3-1
Accuracy of Cost Estimate 3-1
Sizing of Treatment Units 3-3
Development of Capital Cost Estimate 3-5
Development of O&M Costs 3-8
Development of Replacement Costs 3-12
Salvage Value 3-14
Present Worth 3-15
Non-Economic Analysis 3-16
Water Quality 3-16
Discussion of Other Non-Economic Criteria 3-16
Chapter 4 Development of Treatment Trains
Stormwater Treatment Areas 4.1-1
Description 4.1-1
Basis of Evaluation 4.1-3
Economic Analysis 4.1-3
Non-Economic Analysis 4.1-6
Research Priorities 4.1-11

TABLE OF CONTENTS

SECTION	PAGE
Managed Wetlands	4.2-1
Description	4.2-1
Basis of Evaluation	4.2-3
Economic Analysis	4.2-3
Non-Economic Analysis	4.2-6
Research Priorities	4.2-13
Chemical Treatment/Direct Filtration	4.3-1
Description	4.3-1
Basis of Evaluation	4.3.1
Economic Analysis	4.3-3
Non-Economic Analysis	4.3-5
Research Priorities	4.3-13
STA-Chemical Treatment/Direct Filtration	4.4-1
Description	4.4-1
Basis of Evaluation.	4.4-1
Economic Analysis	4.4-4
Non-Economic Analysis	4.4-5
Research Priorities	4.4-12
Chemical Treatment/High Rate Settling	4.5-1
Description	4.5-1
Basis of Evaluation	4.5-1
Economic Analysis	4.5-3
Non-Economic Analysis	4.5-5
Research Priorities	4.5-12
STA-Chemical Treatment/High Rate Settling	4.6-1
Description	4.6-1
Basis of Evaluation	4.6-1
Economic Analysis	4.6-3
Non-Economic Analysis	4.6-5
Research Priorities	4.6-12
Dissolved Air Flotation	4.7-1
Description	4.7-1
Basis of Evaluation	4.7-3
Economic Analysis	4.7-5
Non-Economic Analysis	4.7-6
Research Priorities	4.7-12
STA-Dissolved Air Flotation	4.8-1
Description	4.8-1
Basis of Evaluation	4.8-1
Economic Analysis	4.8-3

TABLE OF CONTENTS

SECTION **PAGE**

Non-Economic Analysis 4.8-5
Research Priorities 4.8-12
Other Developing Phosphorus Removal Treatment Trains 4.9-1
Submerged Vegetation/Limerock 4.9-1
STA-Submerged Vegetation/Limerock 4.9-6
Low-Intensity Chemical Dosing of STAs 4.9-9
Chapter 5 Sensitivity Analyses
Sensitivity of Sizing Relationship of STA and Chemical Process Treatment Plants 5-1
Sensitivity of FEB Size to Chemical Treatment System Present Worth Costs 5-2
Sensitivity of Present Worth Value to Changes in the Discount Rate 5-7
Sensitivity of Present Worth Values to Changes in Salvage Value 5-8

APPENDICES

Appendix A Evaluation Criteria
Appendix B Superior Technologies Descriptions
Appendix C Superior Technologies Advantages vs Disadvantages
Appendix D Results of Screening Process
Appendix E Summary of Technology Ratings
Appendix F Present Worth Cost Analysis Back-up
Appendix G Sensitivity on FEB Particulate Removal
Appendix H Sensitivity on Discount Rate Back-up
Appendix I Salvage Value Sensitivity Analysis

List of Tables

No.	Title	Page no.
2-1	Summary of Alternative Treatment Technologies	2-3
2-2	Assessment of Phosphorus Removal Capability	2-5
2-3	Basis for Capital Cost Ratings	2-7
2-4	Basis of O&M Cost Ratings	2-7
4-1	Basis for Treatment Train Development	4-1
4-2	Assessment of Phosphorus Removal Capability	4-2
4.1-1	Basis of Design and Cost Information for Stormwater Treatment Areas	4.1-4
4.1-2	Predicted Effluent Water Quality for Stormwater Treatment Areas	4.1-8
4.1-3	Predicted Effluent Water Quality for Stormwater Treatment Areas	4.1-9
4.1-4	Effect of Stormwater Treatment Areas on Water Quality	4.1-10
4.2-1	Basis of Design and Cost Information for Managed Wetlands	4.2-4
4.2-2	Predicted Effluent Water Quality for Managed Wetlands	4.2-9
4.2-3	Predicted Effluent Water Quality for Managed Wetlands	4.2-10
4.2-4	Effect of Managed Wetlands on Water Quality	4.2-11
4.3-1	Basis of Design and Cost Information for Chemical Treatment/Direct Filtration	4.3-4
4.3-2	Predicted Effluent Water Quality for Chemical Treatment/Direct Filtration	4.3-9
4.3-3	Predicted Effluent Water Quality for Chemical Treatment/Direct Filtration	4.3-10
4.3-4	Effect of Chemical Treatment/Direct Filtration on Water Quality	4.3-11
4.4-1	Basis of Design and Cost Information for STA-Chemical Treatment/Direct Filtration	4.4-3
4.4-2	Predicted Effluent Water Quality for STA-Chemical Treatment/Direct Filtration	4.4-8
4.4-3	Predicted Effluent Water Quality for STA-Chemical Treatment/Direct Filtration	4.4-9
4.4-4	Effect of STA-Chemical Treatment/Direct Filtration on Water Quality	4.4-11
4.5-1	Basis of Design and Cost Information for Chemical Treatment/High-Rate Settling	4.5-4
4.5-2	Predicted Effluent Water Quality for Chemical Treatment/High-Rate Settling	4.5-8
4.5-3	Predicted Effluent Water Quality for Chemical Treatment/High-Rate Settling	4.5-9
4.5-4	Effect of Chemical Treatment/High-Rate Settling on Water Quality	4.5-10
4.6-1	Basis of Design and Cost Information for STA-Chemical Treatment/High-Rate Settling	4.6-4
4.6-2	Predicted Effluent Water Quality for STA-Chemical Treatment/High-Rate Settling	4.6-9
4.6-3	Predicted Effluent Water Quality for STA-Chemical Treatment/High-Rate Settling	4.6-10
4.6-4	Effect of STA-Chemical Treatment/High-Rate Settling on Water Quality	4.6-11
4.7-1	Basis of Design and Cost Information for Chemical Treatment/Dissolved-Air Flotation/Filtration	4.7-4
4.7-2	Predicted Effluent Water Quality for Chemical Treatment/Dissolved-Air Flotation/Filtration	4.7-8
4.7-3	Predicted Effluent Water Quality for Chemical Treatment/Dissolved-Air Flotation/Filtration	4.7-9
4.7-4	Effect of Chemical Treatment/Dissolved-Air Flotation/Filtration on Water Quality	4.7-10
4.8-1	Basis of Design and Cost Information for STA-Chemical Treatment/Dissolved-Air Flotation/Filtration	4.8-4
4.8-2	Predicted Effluent Water Quality for STA-Chemical Treatment/Dissolved-Air Flotation/Filtration	4.8-8
4.8-3	Predicted Effluent Water Quality for STA-Chemical Treatment/Dissolved-Air Flotation/Filtration	4.8-9
4.8-4	Effect of STA-Chemical Treatment/Dissolved-Air Flotation/Filtration on Water Quality	4.8-10
4.9-1	Predicted Effluent Water Quality for Submerged Vegetation/Limerock	4.9-4
5-1	Summary of Present Worth Analysis for 75 ppb. STA Effluent P Concentration	5-3
5-2	Summary of Present Worth Analysis for 50 ppb. STA Effluent P Concentration	5-4
5-3	Summary of Present Worth Analysis for 30 ppb. STA Effluent P Concentration	5-5
5-4	Changes to Present Worth of a Coupled STA with Direct Filtration Based on Changes in the Size of the STA	5-6

List of Tables (cont'd)

5-5	Sensitivity of Present Worth Particulate P Removal in FEBs	5-7
5-6	Summary Discount Rate Sensitivity Analysis – Stormwater Treatment Areas	5-9
5-7	Summary Discount Rate Sensitivity Analysis – Chemical Treatment/Direct Filtration	5-9
5-8	Summary Discount Rate Sensitivity Analysis – STA- Chemical Treatment/Direct Filtration	5-9
5-9	Summary Salvage Value Sensitivity Analysis - STAs	5-11
5-10	Summary Salvage Value Sensitivity Analysis - Direct Filtration	5-11
5-11	Summary Salvage Value Sensitivity Analysis - STA-Direct Filtration	5-12

List of Figures

No.	Title	Page no.
3.1	Sizing Flow Chart	3-2
4.1	Stormwater Treatment Area	4.1-2
4.2	Managed Wetlands	4.2-2
4.3	Chemical Treatment/Direct Filtration	4.3-2
4.4	STA - Chemical Treatment/Direct Filtration	4.4-2
4.5	Chemical Treatment/High Rate Settling	4.5-2
4.6	STA - Chemical Treatment/High Rate Settling	4.6-2
4.7	Chemical Treatment/Dissolved Air Flotation/Filtration	4.7-2
4.8	STA - Chemical Treatment/Dissolved Air Flotation/Filtration	4.8-2
4.9-1	Submerged Vegetation/Limerock	4.9-3
4.9-2	STA - Submerged Vegetation/Limerock	4.9-8
4.9-3	Low Dosage Chemical Feed System	4.9-10

CHAPTER 1

INTRODUCTION

The Everglades Forever Act (EFA) mandates that the South Florida Water Management District (District) construct large stormwater treatment areas (STAs) to control phosphorus discharges in runoff from the Everglades Agricultural Area (EAA). Explicit in the EFA are priorities specifying that the District shall "...identify other treatment and management methods that are superior to STAs in achieving optimum water quality and quantity for the benefit of the Everglades" (F.S. 373.4592). In addition, "...the Legislature directs that the Everglades Construction Project and regulatory requirements associated with the Statement of Principles of July 1993 be pursued expeditiously, but with flexibility, so that superior technology may be utilized when available."

In response to this mandate, the District undertook an investigation to identify and evaluate treatment technologies or combinations of treatment technologies that have the potential to be superior to STAs in terms of phosphorus removal from EAA drainage waters. To assist in the evaluation, the District retained the services of the joint venture firm PEER Consultants, P.C./Brown and Caldwell. This report is being submitted in partial fulfillment of Amendment 3 to Contract C-E008, dated March 4, 1996.

BACKGROUND

In 1992 and 1993, Brown and Caldwell assisted the District in its initial evaluation of alternative technologies to treat runoff from the EAA. This work was accomplished under Contract C-3051: Everglades Protection Project - Evaluation of Alternative Treatment Technologies. The objective of that Contract was to assess, evaluate, and conceptually develop alternative treatment technologies for removal of phosphorus (to an interim standard of 50 ppb) from water discharging to the Everglades. The results of that analysis were made an integral part of the plan formulation of the Everglades Protection Project by incorporating applicable and beneficial aspects into the general design.

The alternative technology analysis under Contract C-3051 followed a multi-step process. Amendment No. 1 developed the framework for the evaluation of the alternative plans and their respective treatment technologies. Amendment No. 2 provided an initial evaluation of the alternative technologies using the Phase I screening process defined in Amendment No. 1. The recommendations of this preliminary evaluation (i.e., those treatment technologies which represented feasible alternatives for effective phosphorus load reduction from identified sources in the EAA) were evaluated in Amendment No. 4. Amendment No. 3 focused on the evaluation and development of EAA Best Management Practices (BMPs). Amendment No. 5 provided an

assessment of historic phosphorus load contributions from sugar mills in the EAA. Amendment No. 6, which was the final amendment, provided an analysis and development of chemical treatment processes.

PURPOSE AND OBJECTIVE

The purpose of this work was to expedite the investigation of new and/or yet to be proven superior technologies and to consider the application of these technologies to the design of advanced treatment systems. Technologies investigated included technologies which have been proven, or can be reasonably expected to be expanded for implementation at the scale of STAs to achieve the long-term objectives of hydropattern restoration, phosphorus load reduction, and other goals as specified in the EFA. A primary objective of this investigation is the definition of additional research and fact finding needed to move toward implementation of any selected technologies and to estimate how long the research/demonstration phase needs to be conducted to substantiate the feasibility of selected technologies. In addition, the investigation is to expedite the identification and development of selected, proven, superior technologies that may be incorporated into the currently ongoing design efforts for STAs 1W, 2, 5 and 6.

SCOPE OF WORK

The scope of work for the Desktop Evaluation of Treatment Technology Alternatives involved a series of work elements which can be generally summarized as follows:

1. Update of alternative treatment technologies first considered in 1992/1993 as potential superior technologies;

2. Performance of a computerized literature search to identify new technologies being developed worldwide for the removal of phosphorus from stormwater;

3. Screening of alternate technologies to identify those with the greatest potential for application in the EAA as superior technologies;

4. Development of technology combinations, or treatment trains, for detailed economic and non-economic analysis;

5. Sizing of treatment units within each treatment train to satisfy ultimate effluent phosphorus goals ranging from 50 ppb to 10 ppb;

6. Preparation of detailed conceptual level cost estimates for each treatment train to achieve the various effluent phosphorus goals; and

7. Prediction of effluent water quality characteristics from each treatment train.

It should be emphasized that the work accomplished in this investigation was done in a manner that was consistent with previous investigations and on-going EFA design projects.

REPORT ORGANIZATION

This report is divided into a total of five chapters. Following this Introduction, Chapter 2 is a summary of the preliminary analysis and screening of alternative technologies. Chapter 3 provided a detailed discussion of the assumption, methods, cost factors, and criteria used in the economic and non-economic analysis of treatment trains. Chapter 4 includes a description of the treatment technologies included in each treatment train as well as the results of the economic and non-economic analyses specific to the treatment train. Chapter 5 provides a discussion of analyses performed to determine the sensitivity of the analysis results to changes in key assumptions.

Appendix A is a summary of the evaluation criteria used in this evaluation. Appendix B contains descriptions of the alternative technologies. Appendix C provides a discussion of the advantages and disadvantages of the alternative technologies. Appendix D provides a summary of the results of the screening process. Appendix E contains a summary of the technology ratings originally presented in the Task 4 report. Appendix F contains the present worth cost analysis back-up data sheets. Appendix G presents the data sheets for the FEB particulate removal sensitivity analysis. Appendix H contains the data sheets for the discount rate sensitivity analysis. Appendix I provides the data sheets for the salvage value sensitivity analysis.

CHAPTER 2

GENERAL

PRELIMINARY ANALYSIS AND SCREENING

A literature review was conducted to obtain information on technologies used worldwide to remove phosphorus from stormwater. In this section, the screening criteria established by the District is presented as well as a list of phosphorus removal technologies identified and results of the preliminary evaluation.

Establishment of Selection/Screening Criteria

Screening and evaluation criteria used to evaluate each alternative technology were established by the District. A copy of these criteria are included in Appendix A. The screening criteria consisted of nine criterion - phosphorus removal capability, confidence of sustained performance, flexibility, capital costs, operation and maintenance (O&M) costs, public health and safety, schedule for implementation, constructability, and uncertainties. These nine criterion were grouped into three categories: performance, economic, and other. These categories and criterion are discussed below.

Performance Category. The performance category was used to evaluate the capability of a technology to contribute to the objectives of the Everglades Protection Project on a consistent basis over the long-term future. The criterion grouped in this category were total phosphorous removal capability, confidence of sustained performance, and flexibility. A description of each criterion in the category follows.

Total Phosphorous Removal Capability. The evaluation of phosphorous load and concentration reduction was conducted using water quality and hydraulic regimes that bracketed the anticipated full-scale design ranges of all flows currently scheduled to go the STAs.

Confidence of Sustained Performance This criterion evaluated whether or not the technology has been proven.

Flexibility. Each technology was evaluated based on its ability to achieve various levels of phosphorous reduction, and its ability to accommodate future changes in performance requirements.

Economic Category. The economic category was used to compare the monetary costs of implementing the technologies. Conceptual cost projections were developed for basin level

application, and included capital costs, and operation and maintenance costs. A discussion of each criterion in this category follows.

Capital Costs. Capital costs included costs for all activities related to the construction of the alternative technologies. These included the land, labor costs for design, equipment, and facilities (structures, buildings, etc.).

Operation and Maintenance Costs. Operation and maintenance (O&M) costs were developed for each technology. O&M costs included all costs associated with the performance and upkeep of a system including labor, parts, harvesting expenses, chemicals and other materials, replanting, monitoring costs, and repair replacement.

Other Category. This category included those criterion which did not fit in the other categories. Criterion included in this category are discussed below.

Public Health and Safety. Each technology was evaluated to determine the potential impact on the general health and safety of the public. The evaluation included exposure to dangerous chemicals, diseases, or other unsafe conditions.

Schedule for Implementation. The time necessary to implement a fully functional/performing treatment system was determined for each alternative technology and compared with the schedules set in State law and the proposed modified federal settlement agreement.

Constructability. An evaluation of the constructability of each alternative technology at the full physical scale was conducted.

Uncertainties. A list of uncertainties was developed for each technology to identify any outstanding issues or concerns discovered during the review of each technology.

Desktop Selection of Alternative Technologies

An on-line computer search was conducted and scientists with knowledge of phosphorous removal were contacted to identify technologies used worldwide to remove phosphorous from stormwater. Abstracts and papers from promising technologies were also collected and evaluated. Based on the literature review and contact with phosphorous removal experts, 14 new technologies were identified. These new technologies were added to the list of 16 technologies identified during the performance of Contract C-3051. Table 2-1 lists these technologies. A brief description of each technology is included in Appendix B. A list of some of the advantages and disadvantages of each technology is included in Appendix C.

Table 2-1. Summary of Alternative Treatment Technologies

Original Technologies	New Technologies
1. Chemical Treatment/In-Canal Sedimentation	1. Chemical Treatment/ High-Rate Sedimentation
2. Limerock Treatment	2. Chemical Treatment/ Dissolved Air Flotation/Filtration
3. Sedimentation in Limestone Borrows	3. Chemical Treatment/ Adsorption Clarification/Filtration
4. Percolation Ponds	4. Chemical Treatment/ High Rate Magnetic Filtration
5. Deep Well Injection	5. Iron-Coated Sand Filters
6. Aquifer Storage and Recovery	6. Electrocoagulation
7. Water Quality/Supply Diversion Plan	7. Adsorption on Activated Alumina
8. Algal Filtration	8. Chemical Treatment/Microfiltration
9. Nutrient Management System	9. Floating Plants
10. Ozone Treatment	10. Low Intensity Chemical Dosing of STAs
11. Sediment Dredging	11. Submerged Vegetation/Limerock
12. Wetlands (STAs)	12. Dolimitic Limerock/Fixed Film Bioreactor
13. Managed Wetlands	13. Periphyton STAs
14. Chemical Treatment/Direct Filtration	14. Chemical Treatment/High-Rate Two-Stage Filtration
15. Barge Treatment	
16. Overland Flow	

Based on the preliminary evaluation, five of the technologies were not given further consideration. These technologies were deep well injection, aquifer storage and recovery, water quality/supply diversion plan, ozone treatment, and barge treatment.

SCREENING OF ALTERNATIVE TREATMENT TECHNOLOGIES

This section discusses the review process for screening the 24 technologies selected for further evaluation. Following the screening, a meeting was held with representatives from the District, Florida Department of Environmental Protection (FDEP), and the Army Corps of Engineers (USACE) to select the most promising alternative treatment technologies for analysis. Seven technologies were selected for final analysis.

This section describes the methodology for screening the 24 technologies to arrive at the seven.

Technology Evaluation Methodology

Each technology provided a different level of phosphorus removal capability. In order to preserve technologies which may be quite efficient within certain ranges of phosphorus removal, the following ranges of operation were identified.

- Range 1: Reducing phosphorus from 150 ppb to 50 ppb
- Range 2: Reducing phosphorus from 150 ppb to 30 ppb
- Range 3: Reducing phosphorus from 150 ppb to 10 ppb
- Range 4: Reducing phosphorus from 50 ppb to 10 ppb

Some of the technologies were identified as being effective in only one range, while others were found to be effective in one or more ranges. The technologies for each total phosphorus removal range were evaluated together. The highest-ranked technologies in each range were selected for the full process evaluation. Table 2-2 presents an assessment of the technologies that were effective in the various phosphorus removal ranges.

Scoring System. Each technology was evaluated using a relative scoring system. Ratings from 1 to 10 were given to each technology for each criterion. A rating of 1 was the highest (best) and a rating of 10 was the lowest (worst) rating. This rating system allowed technologies with similar characteristics for a particular criterion to receive the same rating. A more detailed discussion of the application of each criterion is presented below. It should be emphasized that the comparative evaluation of technologies was accomplished for the sole purpose of identifying the most applicable technologies to include in the full evaluation of treatment trains, which is described in Chapter 4 of this report.

Table 2. Assessment of Phosphorus Removal Capability

Technology	Phosphorus Removal Range			
	150 -50	150-30	150-10	50-10
Chemical Treatment/In Canal Sedimentation	√			
Limerock Sorption	√			
Sedimentation in Limestone Borrows	√			
Percolation Ponds	√			
Algal Filtration	√	√	√	√
Nutrient Management Systems	√			
Sediment Dredging	√			
Wetlands	√	√		
Managed Wetlands	√	√		
Chemical Treatment/Direct Filtration	√	√	√	√
Overland Flow	√			
Chemical Treatment/High-Rate Settling	√	√		
Chemical Treatment/Dissolved-Air Flotation	√	√	√	√
Chemical Treatment/Adsorption, Clarification, Filtration	√	√	√	√
Chemical Treatment/High-Rate Two-Stage Direct Filtration	√	√	√	√
Chemical Treatment/ High-Rate Upflow Magnetic Filtration	√	√	√	√
Iron Coated Sand Filters	√	√		√
Electrocoagulation	√	√		√
Chemical Treatment/Microfiltration	√	√	√	√
Floating Plants	√			
Submerged Vegetation/Limerock	√	√	√	√
Dolimitic Limerock/Fixed Film Bioreactor	√	√		
Periphyton STA's				√
Low-Intensity Chemical Dosing of STA's	√	√		

Criterion Application

Each technology was evaluated using the nine screening criterion previously discussed. This section provides an explanation of the scoring system for each criterion, how it was applied, and gives any assumptions that were made in the application of the criterion to each technology.

Phosphorus Removal Capability. The technologies were evaluated based on the capability to achieve phosphorus reduction in four phosphorus removal ranges previously discussed. Based on the information in Table 2-2, each technology was evaluated using available phosphorus removal data and rated on a scale of 1 to 10.

Confidence of Sustained Performance. The confidence of sustained performance was an indicator of whether or not a technology's capability to sustain long-term performance had been proven. Long term performance refers to the technology's capability to maintain consistent long-term phosphorus removal efficiencies, as opposed to long term plant operation.

Flexibility. Each technology was evaluated based on its capability to achieve various levels of phosphorous reduction, and the capability to accommodate future changes in performance requirements. Similar to the evaluation of confidence of sustained performance, this criterion was subdivided to allow for flexibility and limited flexibility. Flexibility was defined as an individual technology's capability to accommodate changes in regulations (decreased effluent phosphorus concentrations). A technology was defined as flexible if it could accommodate regulatory or process loading changes. A technology was defined as inflexible if additional equipment, facilities, land, etc. were needed to accommodate regulatory or process loading changes.

Capital Costs. Capital costs were estimated for the implementation of each technology as a complete system, and included construction costs for treatment and sludge management facilities, purchases of equipment, land acquisition, and engineering design costs. Capital costs were estimated for each technology within each applicable phosphorus reduction range. Based on the capital cost estimates prepared, each technology was rated on a scale of 1 to 10. The basis for the capital cost ratings is shown in Table 2-3 below.

O&M Costs. Operation and maintenance costs (O&M) included annual costs for labor, chemicals, materials, supplies, repair and replacement of equipment, sludge disposal, and process sampling and monitoring. O&M costs were estimated based on the costs associated with treating the average daily flow for an average basin in the EAA. The O&M costs for each technology were calculated for each applicable total phosphorus reduction range, and ratings were assigned based on the rating system shown in Table 2-4.

Table 2-3. Basis for Capital Cost Ratings

Rating	Capital Cost Range (millions of $)
1	$0 to $49
2	$50 to $99
3	$100 - $149
4	$150 to $199
5	$200 to $249
6	$250 to $299
7	$300 to $349
8	$350 to $399
9	$400 to $449
10	>$450

Table 2-4. Basis for O&M Cost Ratings

Rating	Annual O&M Cost Range (millions of $)
1	$0 to $1
2	$1 to $2
3	$2 - $3
4	$3 to $4
5	$4 to $5
6	$5 to $6
7	$6 to $7
8	$7 to $8
9	$8 to $9
10	>$9

Public Health and Safety. The evaluation of this criterion included three key elements: exposure to chemicals, worker safety, and exposure to disease. Each technology was given either a 1, 3, 6 or 10 for this criterion. A 10 was assigned if there would be exposure to chemicals, were concerns with worker safety, or concerns regarding exposure to disease. A 6 was assigned if two of the three concerns were present, a 3 was assigned if one of the three concerns were present, and a 1 was assigned if there were no concerns regarding any of these issues.

Schedule for Implementation. Each technology was evaluated based on the time necessary to implement a fully functional/performing treatment system. The evaluation of each technology included estimates on the time needed for the following:

- Feasibility/Demonstration
- Preliminary Design
- Permitting
- Final Design
- Construction
- Start-Up

The estimated schedule for implementation was determined using, as guidelines, the existing schedules for projects ECP-18 and RAM-5, which are identified in the District's Everglades Program Implementation Program Management Plan. Technologies were assigned either a 1, 5, or 10 rating. A rating of 1 was assigned if the estimated time to implement the technology was within the time limits set forth in the ECP-18 accelerated schedule. If the estimated time of implementation for a technology was within the limits defined by the original ECP-18 schedule, a rating of 5 was assigned and a rating of 10 was assigned if there were concerns the implementation of the technology could not meet either schedule.

Constructability. Each technology was evaluated based on construction at basin scale. Issues regarding scale-up of technologies are reflected in this criterion rating. Each technology was given a 1, 5, or 10 based on issues related to it's constructability. A rating of 1 was assigned if no limits on constructability were foreseen, a rating of 5 was given if moderate limits on constructability were deemed likely, and a rating of 10 was assigned if severe limits on constructability were anticipated.

RESULTS OF TECHNOLOGY SCREENING

A one-day meeting was held with District staff and representatives from FDEP and the USACE. The purpose of the meeting was to review the information gathered on the application of the evaluation criteria to each technology, to assign (by group consensus) ratings for each technology, and through a comparative analysis, select the 5 to 7 alternative treatment technologies to

advance to a more detailed analysis. Tables summarizing these results of the screening process are included in Appendix D.

Phosphorus Removal Capability. The technologies which scored best (lowest rating) in the 150 ppb to 50 ppb range were: wetlands, managed wetlands, chemical treatment/direct filtration, chemical treatment/high rate settling, chemical treatment/ dissolved-air flotation/filtration, chemical treatment/adsorption clarification/filtration, chemical treatment/high-rate two-stage filtration, chemical treatment/microfiltration, and low-intensity chemical dosing of STAs. These technologies all received ratings of 1 in the 150 ppb to 50 ppb category.

In the 150 ppb to 30 ppb range, technologies were generally split into two groups. Nine of the 15 technologies evaluated in this phosphorus removal range received ratings between 1 and 3. These technologies were: wetlands; managed wetlands; chemical treatment/direct filtration; chemical treatment/ high-rate settling; chemical treatment/ dissolved-air flotation/filtration; chemical treatment/adsorption clarification/filtration; chemical treatment/high-rate two-stage direct filtration; chemical treatment/microfiltration; and low-intensity chemical dosing of STAs. The remaining six technologies received ratings between 5 and 9.

Eight technologies were evaluated in the 150 ppb to 10 ppb phosphorus removal range. Of these, six were different variations of chemical treatment, and the remaining two were algal filtration and submerged vegetation/limerock. Technologies which received the highest ratings in the 150 ppb to 10 ppb range were: chemical treatment/direct filtration; chemical treatment/dissolved-air flotation; chemical treatment/adsorption clarification/filtration; chemical treatment/high-rate two-stage filtration, and chemical treatment/microfiltration. These technologies received ratings between 1 and 3.

Twelve technologies were evaluated in the 50 ppb to 10 ppb phosphorus removal range. Six technologies in the 50 ppb to 10 ppb range that received ratings between 1 and 3 were chemical treatment technologies. These technologies were: chemical treatment/direct filtration; chemical treatment/ high-rate settling; chemical treatment/dissolved air flotation/filtration; chemical treatment/adsorption clarification/filtration; chemical treatment/high-rate two-stage filtration; and chemical treatment/microfiltration.

Confidence of Sustained Performance Eleven of the 25 technologies have been proven to perform consistently over a long period of time.

Flexibility. One flexibility rating was given for each technology. It was assumed that the flexibility of each technology would remain constant over the range of phosphorus removal required. In this category 11 of the 25 technologies were rated as flexible. Chemical treatment/high-rate two-stage filtration was considered the most flexible, and received a rating of 2. The remaining technologies that were rated as flexible received ratings of 3, with the exception of managed wetlands which received a rating of 5. Because flexibility was defined as

the technology's capability to accommodate changes in effluent phosphorus requirements, land based systems were considered to be less flexible than the mechanical systems.

Capital Costs. To account for the differences in costs to achieve different levels of phosphorus reduction, capital costs were estimated for each technology in each of the phosphorus removal ranges. As previously discussed, flow equalization was assumed for the technologies evaluated in the 150 ppb to 10 ppb and 50 ppb to 10 ppb ranges. Accordingly, an average flow equalization cost of $80 million was used and added to the capital costs of each technology in these two phosphorus removal ranges.

In general, the capital costs associated with most of the technologies ranged between $50 to $200 million for all phosphorus removal ranges. In the 150 ppb to 50 ppb phosphorus removal range, chemical treatment/in-canal sedimentation and submerged vegetation limerock were the least expensive technologies, with each receiving a rating of 1. In the 150 ppb to 30 ppb range, the 150 ppb to 10 ppb range, and the 50 ppb to 10 ppb range, all of the technologies generally received ratings between 3 and 5. High capital costs were typically the result of the need to have a large number of process units to provide the treatment capacity needed.

O&M Cost. An annual cost of $400,000 was used as the cost to maintain flow equalization facilities. This cost was added to each technology evaluated in the 150 ppb to 10 ppb and 50 ppb to 10 ppb ranges. Operation and Maintenance (O&M) costs for the natural systems ranged from $2 million to $4 million per year, while O&M costs for the chemical/mechanical systems ranged from $4 million to over $10 million annually.

Public Health and Safety. Of the 25 technologies evaluated for the public health and safety criterion, seven received ratings of 1, indicating no anticipated threat to public health and safety. These technologies were all natural systems. Typically the chemical/mechanical systems received ratings of 3.

Schedule for Implementation. The schedule for implementation was evaluated for each technology. Key components estimated for each technology centered around the time required for feasibility/demonstration time, preliminary design, permitting, final design, construction, and startup. Of the 25 technologies, only one, wetlands, received a rating of 1.

Constructability. Each technology was rated from 1 to 10 on the basis of difficulty of construction. In general, the majority of the technologies were determined to be constructable with little or no difficulty.

Summary of Technology Ratings

A brief discussion of how each technology compared to the screening criteria follows. The results of the technology ratings are given in Appendix E.

Chemical Treatment/In-Canal Sedimentation. Chemical treatment/in-canal sedimentation was evaluated in the 150 ppb to 50 ppb range only. This technology scored well in terms of capital costs and constructability. However, the technology is inferior from the standpoint of process control. Sludge accumulates in the bottom of the canals and peak flows cause the sludge to scour, resulting in resuspension of the P precipitate in the effluent. In addition, because of the sludge build-up in the bottom of the canal, anaerobic gases are produced which cause the sludge to rise into the liquid. This technology is still in the experimental stage and is expected to provide limited P removal efficiencies.

Limerock Treatment. There is no good data available for phosphorus removal efficiencies for this technology. Concerns with this technology relate to accumulation of solids in the canals. Solids will accumulate in the front end of the canals and as a result, the limerock at the head of these systems will have to be replaced or flushed frequently to prevent clogging.

Sedimentation in Limestone Borrows. Relative to the other technologies, this technology was rated poorly in terms of constructability. This technology is also site dependent, since it can only be considered where the limestone borrows already exist.

Percolation Ponds. The main factor that caused the percolation pond technology to be eliminated from consideration is the cost. The technology is extremely cost prohibitive, and requires extraordinarily large amount of land area for the pond area and berm lengths.

Algal Filtration. Relative to the other technologies, algal filtration received low ratings for constructability and flexibility. Major uncertainties with the constructability of this technology at basin scale is the number of flow-ways needed, and the availability of suitable topography needed to maintain a level surface to construct the flow-ways on. In addition, gas venting is required to prevent gas bubbles from forming under the flow-ways after construction. The systems were not regarded as being flexible. To handle lower effluent phosphorus requirements, its expected additional flow-way length is needed.

Nutrient Management Systems. Nutrient management systems were rated relatively well for all nine screening criterion. The vendors have demonstrated phosphorus removals down to 50 ppb, but not much lower. Cost data supplied by the vendors appeared low compared to estimated costs for other technologies with similar processes. No information on the basis of the cost data was provided. Vendor supplied data supports a farm scale application, but costs data limit a basin scale application.

Sediment Dredging. There are no data to indicate sediment dredging provides phosphorus removal capability to 50 ppb. Therefore, no further evaluation of the technology was conducted.

Wetlands. Relative to the other technologies, this technology consistently rated well. It is a natural passive system. It is a demonstrated, proven technology that received high ratings for costs, maintainability and reliability, constructability, phosphorus removal capability, and scheduling. The technology was considered to have limited flexibility.

Managed Wetlands. This technology combines chemical treatment with traditional wetlands technology. It received ratings similar to those for wetlands technology. It is more costly, however it provides more flexibility. The technology has lower land area requirements than wetlands.

Chemical Treatment. The chemical treatment alternatives are all alike, with the exception of a different solids separation process. As a result, they will all be discussed here. All of the chemical treatment/solid separation processes rated well in terms of phosphorus removal capability. However, it has not been determined whether effluent water quality from chemical treatment facilities is suitable, without conditioning, for discharge into downstream water conservation areas. Chemical treatment/direct filtration was the least expensive of the six, but there were uncertainties regarding solids loadings and filter run times. The chemical treatment/two-stage solids separation processes, (i.e., dissolved air floatation/filtration, adsorption clarification/filtration, and high-rate two-stage filtration, etc.) protect the filter by providing another treatment stage upstream of the filter. These two-stage solids separation, chemical treatment technologies are more expensive. However, the disadvantage of the additional cost is offset by fewer backwash cycles, and longer filter run times, hence lower O&M costs.

Overland Flow. There are no data available that indicate overland flow provides phosphorus removal capability to 50 ppb. Thus the technology was eliminated from further analysis.

Chemical Treatment/High-Rage Magnetic Upflow Direct Filtration. This system has only been tested at flows less than one gallon per minute in Bulgaria. Significant uncertainties regarding scale-up of this technology exist. Thus the technology was eliminated from further analysis.

Iron Coated Sand Filters. Iron coated sand filters are a good conceptual idea. No iron dosing is required to precipitate phosphorus. Phosphorus is adsorbed onto the filter. As a result there is less chemical usage and less sludge production. The technology has not been tested for phosphorus removal at any scale, and therefore was not considered further during this analysis.

Electrocoagulation. Compared to the other technologies capital and O&M costs were prohibitive. Constructability was also a concern, because of the large number of process units

required for treatment. The proprietary process is energy intensive, and there are uncertainties regarding worker safety.

Chemical Treatment/Microfiltration. This conventional microfiltration technology was limited by high capital and O&M costs. The technology rated well in terms of phosphorus removal capability.

Floating Plants. There are no data to indicate floating plants can provide phosphorus removal down to 50 ppb. Therefore, further evaluation of the technology was not conducted.

Submerged Vegetation/Limerock. Submerged vegetation/limerock is a very promising technology. It has the potential to achieve low phosphorus concentrations. It is similar to the wetland technology, since it is a natural, passive treatment technology. It is the only natural, passive system that can be expected to achieve effluent phosphorus concentrations down to 10 ppb. However, the technology has only been tested at bench scale.

Dolimitic Limerock/Fixed Film Bioreactor. Relative to the other technologies, dolimitic limerock/fixed film bioreactors were rated lower for phosphorus removal capability, flexibility, and constructability. Data indicate the technology is more applicable for treating high P concentrations in plants with low flows. To date, no testing has been performed on any large scale or within the range of phosphorus removal required in the EAA. The large number of units required restricts constructability. Uncertainties exist regarding scale-up.

Periphyton STAs. This is an emerging technology and is still in the developmental stage. To date there are no data to substantiate phosphorus removal capability. Uncertainties exists regarding constructability. The technology could require a lengthy research period before it could be designed, and therefore was eliminated from further consideration.

Low-Intensity Chemical Dosing of STAs. This is a low cost technology with the potential to improve the performance of traditional wetlands. Uncertainties exist regarding the fate of iron-bound sediments. However the technology offers the potential for enhanced performance and reliability at marginal, additional costs. Uncertainties exist regarding scale-up.

Chemical Treatment/High-Rate Two Stage Filtration. This technology performed well in pilot-scale tests in Seattle, Washington where it reduced P in lake water to 5 ppb. However, it is not as well developed as technologies that can perform the same function (chemical treatment/DAF/Filtration or Chemical Treatment/High-Rate Settling).

Technologies Selected For Further Evaluation

Based on the comparative analysis described above, the following seven technologies were selected as the alternative treatment technologies potentially capable of meeting project objectives:

- Wetlands
- Managed Wetlands
- Low-Intensity Chemical Dosing of STA's
- Submerged Vegetation Limerock
- Chemical Treatment/Direct Filtration
- Chemical Treatment/High-Rate Sedimentation
- Chemical Treatment/Dissolved-Air Flotation

These were the technologies advanced for further evaluation. The additional scrutiny consisted of development of treatment trains, cost analyses, sensitivity analyses, and water quality characterizations. Treatment trains are defined as a sequence of unit processes which incorporate a selected technology or combination of technologies into a treatment scheme with the objective of reducing effluent phosphorus concentration below 50 ppb. A variety of treatment scenarios were considered, and the methodology used for the rest of the project is discussed in the next section of this report.

CHAPTER 3

METHODOLOGY

Each of the treatment trains developed in this investigation were evaluated based upon economic and non-economic criteria. This section describes the methodology used to evaluate each of the treatment trains according to these criteria.

ECONOMIC ANALYSIS

Economic analysis of the treatment trains involved sizing of individual unit operations and processes and preparing estimates of capital costs, O&M costs, replacement costs, salvage values, and 50-year present worth values. The following paragraphs provide a brief discussion of the methodology employed in carrying out the cost analyses. Additional information on cost derivation specific to individual treatment trains is presented in subsequent sections of this report.

Economic Analysis Process

The process for conducting the economic analysis of treatment trains is depicted in Figure 3-1. An initial strategy was established for sizing the treatment trains. For each treatment train, this strategy focused on the cost optimization of up to 5 approaches for satisfying each of the 10 phosphorus reduction scenarios being considered in this evaluation. A mass balance model, incorporating daily flows from the EAA over the 10-year period of record and basic treatment unit sizing criteria, was used to size treatment units for each of the 400 cases (5 cases per treatment train, 8 treatment trains, 10 phosphorus reduction scenarios). Present worth cost estimates were calculated for each of the 400 cases. The case with the minimum present worth cost for each treatment train for each phosphorus reduction scenario was selected for consideration in this evaluation. This minimum present worth cost was considered the optimum mix of flow equalization basin size and treatment plant size.

Accuracy of Cost Estimates

The cost estimates presented in this report for the various treatment trains were prepared to allow a general comparison between superior technology alternatives. The cost figures presented are not based on site-specific applications of the technologies. Care has been taken throughout the cost estimating process to apply consistent judgement and assumptions. However, because some of the technologies within the treatment trains have limited data with which to develop basin scale costs, the cost estimates presented herein can be expected to have a feasibility planning level accuracy of plus or minus 30 percent of actual costs in present day dollars.

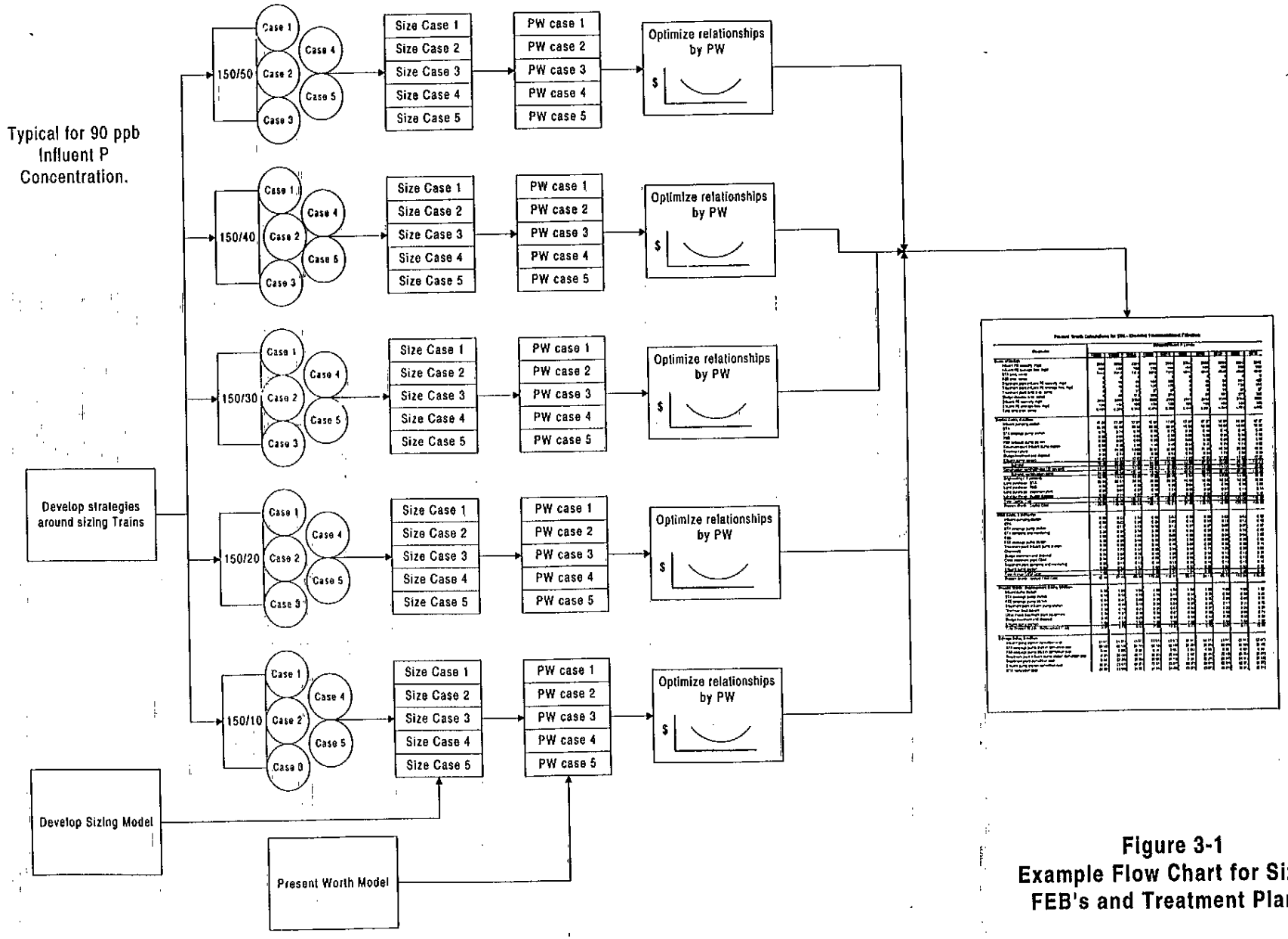

Figure 3-1
Example Flow Chart for Sizing FEB's and Treatment Plants

Sizing Of Treatment Units

Natural, land-based treatment units, such as STAs, were sized to accommodate full capacity flow from an "average basin" in the EAA as defined by the 10-year design period of record from 1979 to 1988. Flows for the "average basin" in the EAA were computed by dividing total EAA flows over the 10-year period by four basins which comprise the EAA. An average daily flow of 189 mgd and a peak flow of 2,330 mgd were used in the analysis. Loading factors, detention times, chemical dosages, P removal rates, etc., presented in the literature and discussed in the individual technology descriptions later in this report were also used in the sizing of the treatment units.

A mass balance model was developed to assist in the sizing of treatment units. The model used daily flows from the EAA (3,653 daily flow records from the EAA basin pumping stations) and average influent P concentrations of 150 ppb and 90 ppb as the basis of the mass balance calculations. The mass balance model was used to perform the following computations:

1. STA land area needed to achieve specific effluent P goals standing alone or coupled to a treatment plant.

2. Capacity of chemical treatment plant needed to achieve specific effluent P goals when coupled to an STA. Once the plant capacity was known, equipment sizes were computed using sizing parameters specific to each technology (e.g., 5 gpm/sq. ft. filtration rate for direct filtration plants).

3. Volume of flow equalization basin (FEB) and capacity of chemical treatment plants not coupled with STAs.

4. Average flow rate for chemical treatment plants over the 10-year period of record, either as stand-alone treatment technologies or as follow-on treatment technologies to an STA.

For treatment technologies with the capability to achieve very low effluent P concentrations, such as some of the chemical treatment technologies, it is not always necessary to treat all of the influent flow to satisfy the effluent P objective. In such cases, blending can be accomplished to reduce project costs. The use of flow equalization also results in lower overall project costs by dampening peak influent flows and reducing the required design capacity of the treatment works. The mass balance model was used to approximate an optimum relationship between flow equalization basin volume and treatment plant design capacity, using minimum present worth cost as the selection criterion.

Other general assumptions or procedures used in the sizing of treatment units are listed below. Assumptions or sizing criteria specific to individual technologies or treatment trains are discussed in later sections of this report.

1. Long-term average effluent P concentrations were assumed to range from 50 ppb to 10 ppb in an effort to bracket the threshold P concentrations currently being developed by the Florida Department of Environmental Protection (FDEP), the SFWMD and FIU.

2. STA land area requirements to achieve the desired long-term average effluent P concentration were calculated according to the design equation developed by Dr. William Walker, Environmental Engineering Consultant (1995).

3. For coupled treatment trains involving an STA as the initial treatment component, the STA was sized to reduce influent P from either 150 ppb or 90 ppb to 50 ppb, and the follow-on process was sized to reduce P from 50 ppb to the desired final effluent P concentration.

4. Treatment processes not preceded by an STA were assumed to be the preceded by a flow equalization basin (FEB). The size of the FEB versus the capacity of the treatment process was determined by multiple iteration with the mass balance model using minimum present worth cost as the optimization criterion.

5. P removal in FEBs was estimated to average 10 percent of the total influent P to the FEB. This was based on data from ENR which suggest that 30 percent of the P discharged from the EAA is in the particulate form. It was assumed that one third of this particulate P (33 percent) is settled out in the FEB.

6. Effective storage volume in STAs and FEBs was assumed to be products of their water surface areas and the allowable range of operating water depth, accounting for the effects of rainfall and evapotranspiration. For FEBs, allowable operating water depths were assumed to range from 0 to 8 feet. For STAs, water depths were assumed to range from 0.5 to 4.5 feet, consistent with current STA design.

7. Treatment plants were assumed to operate at capacity as long as there was sufficient water in the STA or FEB to allow them to do so. With low volumes of water storage, flows to treatment plants were reduced or eliminated to prevent the STAs from drying out. When necessary, flow from Lake Okeechobee (90 ppb P) was introduced to the STAs to maintain a minimum water depth of 0.5 feet.

8. When available storage capacity in an FEB was exhausted and incoming flow exceeded the capacity of the treatment plant, the excess flow was bypassed around the plant. The bypassed flow and the flow processed through the treatment plant were blended prior to discharge to downstream receiving waters.

The treatment unit sizing criteria and assumptions identified above were applied to all treatment trains in a consistent and uniform manner so as to ensure that performance and cost projections are comparable.

Development Of Capital Cost Estimates

Capital cost estimates were prepared for the various treatment trains based upon (1) information presented in previous studies and investigations performed for the South Florida Water Management District, (2) recent cost estimates prepared in support of ongoing designs of EFA related capital improvements, and (3) cost information compiled by PEER/Brown and Caldwell during the course of work on this investigation. The capital cost estimates were broken down into the following cost components:

- Influent pumping station construction
- Stormwater treatment area (STA) construction
- STA seepage pumping station construction
- Flow equalization basin (FEB) construction
- FEB seepage pumping station construction
- Treatment plant influent pumping station construction
- Treatment plant construction
- Sludge treatment and disposal facility construction
- Effluent pumping station construction
- Construction contingencies
- Engineering, permitting and construction management
- Land acquisition--STA
- Land acquisition--FEB
- Land acquisition--treatment plant
- Land acquisition--sludge disposal

All capital cost estimates were adjusted to current dollars using an ENR 20 - Cities Construction Cost Index value of 5572 for June 1996. The following paragraphs provide a summary of the basis for the capital cost estimates developed as part of this evaluation.

Pumping Stations. Base construction costs for the STA, FEB and treatment plant pumping stations were estimated on the basis of a recent cost estimate prepared by Prescott Follett & Associates and Brown and Caldwell in April 1996 as part of the 60 percent Detailed Design Report for Pumping Station G-335. The base construction cost of this pumping station, exclusive of construction contingencies, engineering and land purchase, is estimated to be approximately $16.7 million. This estimate was assumed to be representative on a unit basis for large pumping stations designed to pump against total dynamic heads (TDH) of up to 15 feet as might be the case for pumping into and out of STAs. Base construction costs for other capacity pumping stations in the same low-head range of 15 feet TDH or less were assumed to vary on a flow proportional basis to the estimate for Pumping Station G-335.

Pumping stations designed to deliver flow to FEBs or treatment plants will be required to overcome higher heads. Pumping stations used to convey flow to FEBs were assumed to pump against 20 feet

TDH (medium head) based upon the 4 foot increase in allowable water depth in an FEB compared to an STA. Pumping stations to convey flow to treatment plants were assumed to pump against 25 feet TDH (high head) based upon the work performed previously by Brown and Caldwell in the Phase II Evaluation of Alternative Treatment Technologies (Contract C-3051, Amendment 4, May 1993).

Base construction costs for medium and high head pumping stations were estimated based upon the estimate for Pumping Station G-335 at the same design capacity. It was determined that the higher heads would increase horsepower requirements by about 33 and 67 percent for the medium head and high head stations respectively. Pumping equipment typically represents about one quarter to one third of the overall construction cost of the station and the estimated increases in horsepower requirements were translated into similar increases in overall pumping equipment costs. Accordingly, the base construction costs for the medium head and high head pumping stations were estimated to be 10 percent and 25 percent higher than the base construction cost of low head pumping stations for the same flow capacities.

Seepage Pumping Stations. The base construction cost for a 160 cfs (103 mgd) seepage pumping station for STA 2 (G-337) was estimated by Burns & McDonnell in July 1995 to be about $639,000. A more recent estimate for Pumping Station G-337 by Prescott Follett & Associates and Brown and Caldwell as part of the design of the station indicates the base construction cost to be approximately $680,000 in current dollars. This estimate was assumed to be representative on a unit basis for seepage pumping stations associated with STAs. Base construction costs for other STA seepage pumping stations were assumed to be proportional to the base construction cost of Pumping Station G-337 on the basis of the STA acreage involved. Base construction costs for FEB seepage pumping stations were estimated to be 2 times the base construction cost of STA seepage pumping stations (serving the same acreage) under the assumption that seepage through FEB levees would be considerably greater than seepage through STA levees on a long-term average basis.

Stormwater Treatment Areas. Construction cost estimates presented in the February 1994 Conceptual Design Report prepared by Burns & McDonnell indicate that the average cost of STA construction in the EAA is approximately $5500 per acre of effective treatment area (1996 dollars). A January 1996 construction cost estimate for STA 2, prepared by Brown and Caldwell in support of the 30 percent General Design Report, indicated the construction cost to be $5,430 per acre of treatment area. Both of these estimates included a 20 percent construction contingency allowance, but no land acquisition costs or engineering costs. Based upon these estimates, a base construction cost of $4,583 per acre of treatment area ($5,500 per acre less 20 percent contingency) was used for all STAs in this evaluation. This cost includes the cost of access roads, site preparation, canal and levee construction, and control structures directly associated with the STAs.

Flow Equalization Basins. Flow equalization basins were assumed to be constructed in a manner similar to the STAs. However, because water depths in the FEBs were assumed to be as high as 8 feet, it was assumed that 12 to 15-foot high levees would be required. This doubles the volume of

levee material compared to that required for an 8 to 10-foot high levee and was estimated to represent a 75 percent increase in the per acre base construction cost of an STA.

Additionally, because of the potential for significantly greater seepage through the FEB levees, enhanced seepage control was factored into the levee design which increased the per acre base construction cost by another 25 percent. On the other hand, access roads, site preparation and internal flow distribution requirements will be less with an FEB than with an STA. This was assumed to represent a per acre cost savings of 20 percent compared to the STAs.

The base construction cost for STAs was estimated above to be $4583 per acre. Adjustments to this base cost amounted to a net increase of 80 percent. Accordingly, a base cost of $8,250 per acre (net of contingency allowance) was used for all FEB construction in this evaluation. As was the case for the STAs, this cost includes only that construction which is directly related and integral to the FEB, but does not include any pumping station, engineering, or land acquisition costs.

Chemical Treatment Plants. Detailed capital cost estimates for chemical treatment (direct filtration) plants ranging in capacity from 150 to 835 mgd were developed previously by Brown and Caldwell and presented in reports prepared for the District in 1993 (Contract C - 3051, Amendments 4 and 6). The basis of design used in preparing those previous estimates was reviewed and was determined to be valid as a basis for developing capital costs in this evaluation. Care was taken to separate out all cost components from the previous estimates that are being estimated separately in this evaluation (i.e., influent pumping station, sludge treatment and disposal, land acquisition, etc.) to avoid duplication. After the appropriate deductions, the base construction cost of direct filtration plants with 150 and 835 mgd capacities were found to be about $20 million and about $73 million, respectively, in 1996 dollars. The base constructions cost of direct filtration plants with other capacities were assumed to vary on a flow proportional basis compared to these two estimates.

The other chemical treatment technologies considered in this evaluation differ from direct filtration only in the method used for solids separation. Therefore, to develop base construction cost estimates for the dissolved air flotation (DAF) and high rate sedimentation technologies, the filtration component of the direct filtration estimate was replaced with the cost of the other solids separation systems. The cost of the filtration and backwash systems typically ranged from about 50 percent of the total cost of direct filtration in the smaller capacity plant sizes to over 60 percent for an 835 mgd capacity plant.

Cost estimates for DAF/filtration and high rate sedimentation processes were developed with planning level cost information provided by suppliers of the process equipment required. On the basis of this information, it was determined that the base construction cost of DAF/filtration would be expected to be somewhat higher than the cost of direct filtration , ranging from about $23 million for the 150 mgd capacity plant to about $93 million for the 835-mgd capacity plant. The base construction cost for high rate sedimentation was determined to be even higher at about $30 million for the 150-mgd plant and about $140 million for the 850-mgd plant. As with direct filtration, the

base construction costs of DAF/filtration and high rate sedimentation plants with other design capacities were assumed to vary from these estimates on a flow proportional basis.

Sludge Treatment and Disposal. During the Phase II Evaluation of Alternative Treatment Technologies (Contract C - 3051, Amendment 4, May 1993), Brown and Caldwell evaluated a number of alternatives for the treatment and disposal of sludge generated from the chemical treatment of EAA drainage waters. For the purposes of this evaluation, it was assumed that sludge thickening in settling ponds followed by underground injection on a dedicated land disposal site (during the dry season when net soil evaporation is positive) adjacent to the treatment plant would be the least cost alternative. A maximum sludge production rate of about 9500 dry tons per year was calculated for the 835-mgd capacity chemical treatment plant treating an average daily flow of 148 mgd. For different size plants, sludge production was allowed to vary on a proportional basis to the average daily flow treated. Land area requirements for sludge disposal were based on a permissible solids loading rate of 28.4 dry tons/acre/year as projected in the 1993 evaluations.

Based upon previous cost estimates presented in the Amendment 4 report, the base construction cost for sludge treatment and disposal facilities (settling ponds, storage tanks, injection equipment, etc.) was estimated to be about $20,000 per mgd of average day design flow at the plant. This estimate does not include land cost which was considered as a separate capital cost component. It should also be noted that this cost is common to all of the chemical treatment technologies considered in this evaluation since influent characteristics and chemical dosages are the same in each case.

Construction Contingencies. Construction contingency costs were assumed to total 20 percent of the aggregate base construction cost for all construction components in each treatment train.

Engineering, Permitting and Construction Management. Engineering, permitting and construction management costs were assumed to total 15 percent of construction costs, including construction contingency costs.

Land Acquisition Costs. Land acquisition costs for STAs, FEBs, treatment plant sites, and sludge disposal sites were calculated at $3,500 per acre. This figure is supported by District records for EAA land acquisition for the ECP. In all cases, it was assumed that 10 percent more land than is actually needed for treatment purposes must be acquired to allow for pumping stations, access roads, administrative facilities, etc. to be constructed, and to provide for construction and buffer zones where required.

Development of Operation and Maintenance Costs.

O&M cost estimates were prepared for the various treatment trains based upon (1) data and information presented in previous studies and investigations performed for the District, and (2) data and information compiled by PEER/ Brown and Caldwell during the performance of work on this investigation. The O&M cost estimates were broken down into the following cost components:

- Influent pumping station
- Stormwater treatment area (STA)
- STA seepage pumping station
- STA sampling and monitoring
- Flow equalization basin (FEB)
- FEB seepage pumping station
- Treatment plant influent pumping station
- Chemicals
- Sludge treatment and disposal
- Other treatment plant O&M
- Treatment plant sampling and monitoring
- Effluent pumping station

O&M cost estimates from previous studies and investigations were adjusted to 1996 dollars by assuming an average annual inflation rate of 3 percent. This is consistent with the average increase in the Consumer Price Index of 2.8 percent per year over the past 5 years. The following paragraphs provide a summary of the basis for the O&M cost estimates developed as part of this evaluation.

Pumping Stations. Detailed O&M cost estimates for various STA inflow and outflow pumping stations were presented in the 1994 Burns & McDonnell Conceptual Design Report. These estimates included labor costs as well as fuel costs and equipment maintenance and repair costs. These estimates were reviewed and adjusted to 1996 dollars, and were determined to be valid for low-head (15 feet TDH) pumping applications in this evaluation. Annual O&M costs for low-head pumping stations delivering average daily flows of 77 mgd, 114 mgd, and 160 mgd were estimated to be $0.46 million, $0.64 million, and $0.71 million respectively. Annual O&M costs for low-head pumping stations with other average daily flows over the 10-year period of record were assumed to vary from these estimates on a flow proportional basis.

For medium head (20 feet TDH) and high head (25 feet TDH) pumping stations, labor requirements might be expected to increase only marginally compared to low head pumping stations. However, fuel costs would be expected to increase substantially as would equipment maintenance and repair. Increases in fuel costs can be approximated by the percentage increase in head requirements (33 percent for medium head and 67 percent for high head pumping stations). Fuel costs were estimated by Burns & McDonnell to be about 15 percent of total pumping station O&M costs. Therefore, increased fuel costs represent a 5 percent increase in the annual O&M cost of medium head stations and a 10 percent increase in the annual O&M cost of high head stations compared to low head stations.

Increases to non-fuel related annual O&M costs were assumed to increase by 5 percent for medium head pumping stations and 10 percent for high head pumping stations to account for the increased cost of spare parts, and the incremental increase in maintenance and repair time on larger equipment. Overall, the annual O&M cost for medium head and high head pumping stations was

estimated to be 10 percent and 20 percent higher, respectively, compared with the estimated O&M cost of low head pumping stations.

It should be noted that labor costs account for about 50 percent of the annual O&M cost estimates discussed above since they were assumed to be stand-alone stations when the estimates were prepared. Because most of the treatment trains considered in this evaluation have multiple pumping stations, it is not reasonable to assume that each station will have a full operations staff permanently assigned to it. Therefore, to avoid duplication of labor costs it was assumed that if both an influent and effluent pumping station were included in a treatment train, the annual O&M cost at each station would be reduced by one third (33 percent) to reflect sharing of operations staff between the two. Furthermore, if a third station was also involved (e.g. a treatment plant influent pumping station), it was assumed that the annual O&M cost of the third station would be reduced by one half (50 percent).

Seepage Pumping Stations. The 1994 Burns & McDonnell Conceptual Design Report allocated $100,000 per year for O&M costs associated with STA seepage pumping stations, independent of size. In this evaluation, this allocation was adjusted to $110,000 per year (1996 dollars) and was determined to be representative of Pumping Station G-337 (serving 6430 acres of treatment area in STA 2). Annual O&M costs for other seepage pumping stations were assumed to be proportional to this estimate on the basis of the STA treatment area served. An additional base cost of $10,000 per year was added to each O&M cost estimate to account for costs that are not related to the size of the seepage pumping station being considered.

It is anticipated that seepage from an FEB will be greater than seepage from an STA due to higher water depths. To account for this, it was assumed that annual O&M costs for seepage pumping stations serving FEBs will be 1.5 times the annual O&M costs for seepage pumping stations serving STAs of the same acreage.

Stormwater Treatment Areas. The 1994 Burns & McDonnell Conceptual Design Report presented detailed estimates of anticipated annual O&M costs for STAs, exclusive of sampling and monitoring costs. All components of these estimates, with the exception of levee/wetlands maintenance, are being considered separately in this evaluation under other O&M cost categories. The average annual O&M cost estimates for levee/ wetlands maintenance in the Burns & McDonnell report ranged from about $23 per acre for STA 5 to $31 per acre for STA 1W, averaging about $27 per acre for five STAs. This estimate was adjusted to $30 per acre (1996 dollars) and was used as the basis for estimating annual O&M costs for STAs considered in this evaluation.

STA Sampling and Monitoring. Annual STA sampling and monitoring costs were derived from the following assumptions:

1. Permit conditions for sampling and monitoring were limited to influent and effluent streams, although multiple samples may be required at each. Estimated monthly costs for sampling equipment and laboratory analyses were $5,000.

2. Labor included the equivalent of one full-time professional, the equivalent of one full-time field technician, and administrative support. Estimated monthly labor cost was $17,500.

3. The cost of miscellaneous materials and supplies and a field vehicle averaged $1,000 per month.

4. The cost of maintaining and accessing data (labor and equipment) in the District's database averaged $1,500 per month.

The total O&M costs for STA sampling and monitoring was estimated to be $25,000 per month or $300,000 per year. This cost was applied to all STAs in this study regardless of size.

Flow Equalization Basins. Operation and maintenance of FEBs was limited to regular inspection and periodic maintenance and repair of canals, levees, control structures, etc. In this respect, the functions were similar to those for levee/wetlands maintenance associated with STAs. However, because the levees are significantly larger and seepage was expected to be greater compared to the STAs, maintenance costs were also estimated to increase. Annual O&M costs for maintenance and repair of FEBs were assumed to be twice the cost estimated for STAs, or $60 per acre. This annual O&M cost was applied to all FEBs considered in this evaluation, independent of FEB size.

Chemical Costs. Chemical dosages for the chemical treatment alternatives were based on the bench scale dosing studies performed by Brown and Caldwell in 1993 (Contract C-3051, Amendment 6). Based upon the results of these studies, average dosages of 16 mg/L iron (as Fe), 16 mg/l lime (CaO), and 0.5 mg/L polymer were used in this evaluation. Using chemical costs of $180 per dry ton for $FeCl_3$, $66 per ton for lime, and $2 per pound for polymer, chemical costs were estimated to total about $17,400 per year per mgd of average daily flow treated at the chemical treatment plants. This chemical cost was applied uniformly to all chemical treatment alternatives, since the only differences between alternatives were in the solids separation processes involved and not in the chemical dosages required.

Sludge Treatment and Disposal. Estimates of sludge treatment and disposal O&M costs were derived form previous estimates prepared by Brown and Caldwell in 1993 during the Phase II Evaluation of Alternative Treatment Technologies (Contract C-3051, Amendment 4). It was estimated that the cost of operating and maintaining the sludge settling pond(s), sludge holding tank(s) and sludge injection equipment would average about $1,200 per year per mgd of average daily flow treated at the plant. While the quantity of sludge might be expected to vary slightly between the chemical treatment alternatives, this average unit cost figure was applied uniformly to all of the chemical treatment alternatives.

Other Treatment Plant O&M. This cost category included all other chemical treatment plant O&M costs not previously considered under pumping stations, chemical costs, or sludge treatment and disposal. Included in this category were costs for operation and maintenance of the plant site,

yard piping, and treatment process units, including labor, equipment and material costs associated with those activities. O&M cost estimates were derived from previous estimates for direct filtration plants prepared by Brown and Caldwell in 1993 (Contract C-3051, Amendments 4 and 6) and were adjusted to 1996 dollars. An average O&M cost of about $6,000 per year per mgd of average daily flow was estimated for direct filtration treatment plants. Average O&M costs of about $11,000 and about $4,000 per year per mgd of average daily flow were estimated for DAF/filtration and high rate sedimentation plants, respectively.

Treatment Plant Sampling and Monitoring. O&M activities associated with sampling and monitoring of chemical treatment plants were expected to be less labor intensive when compared to STAs, but the operation of chemical plants would also require more laboratory work. On an aggregate basis, it was assumed that sampling and monitoring costs for a chemical treatment plant would be the same as for an STA ($300,000 per year). However, for coupled systems involving both STAs and chemical treatment plants, it was assumed that the cost of treatment plant sampling and monitoring would be reduced by 50 percent to avoid duplication of labor and influent/effluent monitoring costs.

Development of Replacement Costs.

Replacement cost estimates were prepared for the various treatment trains based on (1) recent design efforts in support of EFA related capital improvements, (2) Brown and Caldwell's proprietary cost estimating software (BACPAC) and the associated database of historical construction costs, and (3) cost information compiled by PEER Consultants, P.C./Brown and Caldwell during the performance of this investigation.

The replacement cost estimates were broken down into the following components:

- Influent Pumping Station,
- STA Seepage Pumping Station,
- FEB Seepage Pumping Station,
- Treatment Plant Influent Pumping Station,
- Chemical Feed System,
- Other Major Treatment Plant Equipment,
- Sludge Treatment and Disposal, and
- Effluent Pumping Station.

Presented below is a description of the replacement cost components listed above.

Pumping Stations. The large low-head pumping stations identified are consistent with the design standards used for the designs of Pumping Stations G-335 and G-310. Based on current construction cost estimates provided by Prescott Follett & Associates and Brown and Caldwell, the major pump station equipment accounts for 25 percent of the complete pumping station construction

costs. Vendor supplied information indicates a major rebuild and refurbishment of this equipment is typically required every 25 years assuming that recommended O&M procedures are carried out on a routine basis. Using this data, costs were normalized for the 50-year present worth calculations based on 25 percent of the pumping station construction costs being replaced once at the mid-point of the 50-year study period.

Seepage Pumping Stations. Seepage pumping station conceptual designs are consistent with other planned stormwater pumping stations as discussed in the General Design Memorandum produced by Burns and McDonnell. Estimates prepared by Prescott Follett and Associates and Brown and Caldwell, design consultants for station G-337, indicate that pumping equipment can be expected to account for 50 percent of the total seepage pumping station construction costs. Although these facilities are much smaller, the replacement frequency is the same (25 years). Using this data, costs were normalized for the 50-year present worth calculations based on 50 percent of the pumping station construction cost replaced once at the mid-point of the 50-year study period.

Treatment Plant Influent Pumping Stations. As discussed earlier, these conceptual designs are higher head than either the seepage pumping stations or the influent or effluent pumping stations. This change is reflected in the capital cost figures. However, the treatment plant influent pumping stations are the same concept as the seepage pumping stations. The discussion above for determining the replacement costs for the major equipment and the replacement frequency still holds. Using these data, costs were normalized for the 50-year present worth calculations for treatment plant pumping stations based on 50 percent of the pumping station construction cost being replaced once at the mid-point of the 50-year study period.

Chemical Feed System. The chemicals which are expected to be used in the chemical treatment process are the same ones which have been used for years. These chemicals are highly corrosive and chemical feed systems typically require more frequent replacement than other treatment plant equipment. Based on Brown and Caldwell's experience in the design, specification, and upgrading of chemical feed systems, it is expected that the chemical feed systems will require major replacement or rehabilitation on the order of every 10 years. This work typically amounts to about 60 percent of the construction cost. Using these data, costs were normalized for the 50-year present worth calculations based on 60 percent of the chemical feed system construction cost being replaced every 10 years during the 50-year study period.

Other Major Treatment Plant Equipment. This category includes costs for replacement of items such as flocculators, mixers, clarifier mechanisms, and filter media. It is expected that these will require major replacement or rehabilitation on the order of every 20 years. This work typically amounts to about 25 percent of the original construction cost. Using this data, costs were normalized for the 50-year present worth calculations based on 25 percent of the treatment plant construction cost being replaced in the 20th year and the 40th year of the 50-year study period.

Sludge Treatment and Disposal. As discussed in the section on Development of Capital Cost Estimates, the sludge treatment and disposal portions of the treatment works were separated from

the other plant costs. Brown and Caldwell's proprietary cost estimating software BACPAC was used to define the capital costs for this equipment. Based on Brown and Caldwell's experience in the design, specification, and upgrading of sludge facilities, it was expected that these facilities require major rehabilitation or replacement on the order of every 20 years. This work typically will amount to 25 percent of the original construction cost. Using this data, costs were normalized for the 50-year present worth calculations based on 25 percent of the sludge treatment and disposal construction cost being replaced in the 20th year and the 40th year of the 50-year study period.

Salvage Value

Salvage value estimates were prepared for the various treatment trains considering both salvage value and salvage costs. The basis for these calculations was the assumption that the site had to be returned to base land without structures.

The various individual cost components included:

I. Demolition costs, which were estimated for structures such as:

- Influent Pumping Station
- STA Seepage Pumping Station
- FEB Seepage Pumping Station
- Treatment Plant Influent Pumping Station
- Treatment Plant
- Effluent Pumping Station

II. Restoration costs, which were estimated for levees and canals associated with:

- STA Restoration
- FEB Restoration
- Sludge Disposal Site Restoration

III. Land value, which was assumed to be equal to the original purchase price of the land for the following:

- STA Land
- FEB Land
- Treatment Plant Land
- Sludge Disposal Land

Brown and Caldwell's construction management group provided guidance on the cost of demolition. Demolition cost is typically 20 percent of construction cost for water treatment plants

and other similar structures. Therefore, demolition costs for all components were estimated at 20 percent of the original construction cost in 1996 dollars.

Restoration costs were assigned to FEBs and STAs for levee demolition. Only perimeter levees were considered. Costs were assigned for demolition of the STA levees at $300,000 per mile of levee based on information provided by the U.S. Army Corps of Engineers. Costs were assigned for demolition of the FEB levees at $400,000 per mile of levee based upon a comparison of the volume of material per mile between STAs and FEBs. STAs and FEBs were assumed to be square for this analysis.

Land used for sludge disposal was assumed to be purchased for that purpose only and was assumed to be dedicated. Therefore, no land value was taken at the end of the project and no land restoration costs were assigned.

Land used for the STAs, FEBs and treatment plants was considered valuable after the project. For the purposes of this evaluation, it was assumed that EAA land is currently at its highest and best use and will not likely increase in value over the 50-year period. This is also supported by information from District appraisers which show no appreciable value trend over the past 5 years. The present worth values presented in this evaluation assume land salvage value equal to purchase price. An analysis of the sensitivity to this assumption is presented in Chapter 5 of this report.

Present Worth

50-year present worth was calculated for 8 treatment trains for each applicable P removal scenario using a net interest rate of 4 percent. This rate was based on the current 10-year government bond rate of 6.8 percent less an inflation rate of 2.8 percent. The inflation rate was based on a 5 year average of the Consumer Price Index, U.S. City Average, All Items, published by the U.S. Department of Labor, Bureau of Labor Statistics.

Present worth costs of the treatment trains were developed as a sum of capital costs (CC) plus the present worth of the O&M costs (O&M) plus the present worth of the replacement costs (RC) minus the present worth of the net salvage value/cost (SV). The present worth of the O&M costs was calculated using a uniform-series present worth factor times the estimated annual O&M costs.

The present worth of the replacement costs was calculated using a single-payment present-worth factor which allows determination of the present worth of the replacement value at the specific replacement period. Each of the periods was unique for the equipment being replaced.

Present worth of the salvage values was determined as the present worth of the sum of the salvage costs and salvage values using a single-payment present-worth factor at the end of the 50 years. For some alternatives, salvage value was determined to be negative, indicating a net cost at the end of 50 years.

The present worth results for the various treatment trains are presented in the discussions of each train.

NON-ECONOMIC ANALYSIS

Water Quality

A conceptual level finished water quality characterization was completed for each of the treatment trains. The methodology used to perform these characterizations is included in the discussion for each treatment train in Chapter 4.

Discussion of Other Non-Economic Criteria

This section provides discussion of the other non-economic criteria that were used to evaluate each of the treatment trains. These criteria include robustness, hydropattern restoration, byproduct generation, permittability, impact to the C&SF project, compliance with the EFA and compliance with the federal consent decree.

Robustness. This criterion evaluated the ability of each treatment train to perform under variable loading rates due to droughts, floods, or potential changes in effluent requirements.

Hydropattern Restoration. Each treatment train was evaluated on the basis of its impact on hydropattern restoration relative to the quantity, spatial distribution, and timing of process flow discharges to the water conservation areas.

Byproduct Generation. This criterion determined whether or not byproducts were generated during the treatment of water through the treatment train. These byproducts include chemical wastes, sludge production, and other byproducts generated by the treatment trains.

Permittability. This criterion addressed the relative likelihood of obtaining the necessary state and federal permits for the various treatment trains. Four aspects of permittability were considered:

1. Whether it directly affects EFA and Consent Decree requirements, such as the construction of STAs, the ability to achieve the required load reductions and the phosphorus concentration targets;

2. Whether reasonable assurances can be given that the water quality objectives will be met.

3. Whether specific water quality parameters will be affected and may cause violation of Class III water quality standards in the outflow and downstream.

4. Whether it can meet a "public interest test" required to obtain federal approvals. This may involve consideration of less specific issues such as perceived compatibility with potential future public works or the likelihood of secondary benefits. The most frequently discussed future public works projects in the EAA are large scale water storage or attenuation projects. A secondary benefit for the purpose of the permittability category is the use of treatment units by wildlife. This favors those treatment trains that include large wetland and FSB components.

Impact on C&SF Project. This criterion was used to review the impact of each of the treatment trains on the Central and South Florida Flood Control Project (C&SF Project). Three aspects of the C&SF Project were considered:

- The impact on water supply.
- The ability to attenuate peak flow rates.
- The ability to store water for later release.

Compliance with EFA. This criterion was used to evaluate compliance with the Everglades Forever Act (EFA). The EFA was signed into Florida law in 1994. It contains very specific provisions for what is to be done to provide water quality treatment for stormwater entering the Everglades from the EAA. It sets construction deadlines for individual treatment projects and specifies STAs as the initial treatment technology to be employed. Technologies that do not include STAs or that lead to significant slippage in the schedule would require a change in the law. Pertinent issues include:

1. Requires the implementation of the Everglades Construction Project (ECP) which consists of STAs and hydropattern restoration;

2. Requires the adoption of water quality criteria for inflows to the Everglades Protection Area (EPA), including a numerical interpretation of the Class III nutrient criteria for the EPA, with a default value of 10 ppb for total phosphorus; and

3. Requires the District to apply for and submit to the FDEP for approval, 5-year permits for the STAs.

Each one of the treatment trains was evaluated for its compliance with respect to policy issues, whether or not it will meet the schedule set by the EFA, and whether or not it can meet the default threshold P concentration of 10 ppb.

Compliance with Federal Consent Decree. The federal consent decree is an official ruling of the federal court system resulting from the water quality lawsuit originally filed in 1988. Hearings were held in the fall of 1995 to modify the consent decree to bring it into conformance with the Everglades Forever Act. Although a final ruling has not been made, it was assumed for this project that the deadlines for construction will parallel the EFA.

Pertinent issues include the following:

- Meet phosphorus limits on inflows to Everglades National Park (ENP) as computed using the specific formula contained in the Decree.
- P levels in the Loxahatchee National Wildlife Refuge must meet those calculated by the given formula.
- EAA phosphorus load to be reduced by 80 percent to the EPA as a whole and 85 percent to the Loxahatchee National Wildlife Refuge.
- Mandates research to interpret Class III nutrient criteria, including models on P dynamics in EPA.
- Inflow to the Loxahatchee National Wildlife Refuge must result in Class III water quality in the Refuge.
- Quantity, distribution and timing needed by ENP and Loxahatchee National Wildlife Refuge; quantity reductions caused by the BMP Program must be made up.
- STAs will be used to treat water.

Each of the treatment trains were evaluated for its compliance with the federal consent decree with respect to policy issues, total effluent phosphorus concentrations, and Class III water quality.

CHAPTER 4

DEVELOPMENT OF TREATMENT TRAINS

For the purposes of this report, a treatment train is defined as a sequence of unit operations and processes which incorporates a selected technology or combination of technologies into a treatment scheme with the objective of reducing the effluent phosphorus concentration to below 50 ppb. Each treatment train was evaluated based on the four P removal scenarios presented in Table 4-1. If a treatment train was determined to be incapable of achieving an effluent P concentration of 10 ppb, it was evaluated on its ability to achieve the lowest effluent P concentration possible.

Table 4-1. Basis for Treatment Train Development

Scenario	Influent P Concentration	Preceded by an STA?	Influent P concentration to the technology	Effluent P concentration following the technology
1	150 ppb	Yes	50 ppb	10 ppb
2	150 ppb	No	150 ppb	10 ppb
3	90 ppb	Yes	50 ppb	10 ppb
4	90 ppb	No	90 ppb	10 ppb

Using the seven treatment technologies selected for further evaluation, a total of 11 treatment trains were identified and are presented in Table 4-2. Each treatment train was also evaluated based on its capability to achieve effluent P concentrations of 10 ppb, 20 ppb, 30 ppb, and 40 ppb. Table 4-2 presents an assessment of the P removal capability of each treatment train.

Table 4-2. Assessment of Phosphorus Removal Capability

Number	Treatment Train	Effluent P Capability				
		50 ppb	40 ppb	30 ppb	20 ppb	10 ppb
1	STA	✓	✓	✓		
2	Low Intensity Chemical Dosing of STAs	✓	✓	✓		
3	Submerged Vegetation Limerock	✓	✓	✓	✓	✓
4	STA - Submerged Vegetation Limerock	✓	✓	✓	✓	✓
5	Managed Wetlands	✓	✓	✓		
6	Direct Filtration	✓	✓	✓	✓	✓
7	STA - Direct Filtration	✓	✓	✓	✓	✓
8	High-Rate Settling	✓	✓	✓	✓	
9	STA - High-Rate Settling	✓	✓	✓	✓	
10	Dissolved-Air Flotation/Filtration	✓	✓	✓	✓	✓
11	STA - Dissolved-Air Flotation/Filtration	✓	✓	✓	✓	✓

The following sections include descriptions of each of the eleven treatment trains and the results of the evaluations.

4.1 STORMWATER TREATMENT AREAS

SECTION 4.1
STORMWATER TREATMENT AREAS

DESCRIPTION

Stormwater treatment areas (STAs) are recognized in the EFA as a primary means of reducing total phosphorus loads from the EAA. Ongoing designs are based on achieving an interim total phosphorus standard of 50 ppb. However, it is not clear whether STAs on their own can achieve total phosphorus concentrations significantly less than 50 ppb.

There are numerous types of wetland systems that have been developed in south Florida. These include: (1) emergent vegetation on organic soils (muck) such as those found in the northern Everglades; (2) emergent vegetation on marl soils such as those found in some portions of the southern Everglades; and (3) aquatic wetlands on either muck or marl soils in which submersed macrophytes or periphyton are the dominant communities. For the purposes of this evaluation, STAs are defined as wetlands on muck soils where emergent vegetation dominates.

STAs are designed to remove nutrients from stormwater by retaining the water and exposing it to a set of naturally occurring biological, chemical, and physical processes. The existing large-scale (3,681 acres) prototype for STA technology, the Everglades Nutrient Removal (ENR) Project, is providing valuable information on the phosphorous (P) removal mechanisms and the relationships between P and other constituents that affect treatment performance in large wetland treatment systems. Current data from the ENR Project suggest that STAs may be able to reduce P concentrations to 30 ppb (or possibly even lower) instead of the 50 ppb which has previously been suggested as the limit of their P removal capability.

Wetlands have been proven effective in significantly reducing the concentrations of biochemical oxygen demand, suspended solids, nitrogen, and phosphorus, in addition to metals, organics, and pathogens. Effective performance depends on several factors including: pretreatment (if included), conservative constituent and hydraulic loading rates, collection and monitoring of operational data to assess system performance, and implementation of successful operational strategies (Kadlec and Knight, 1996).

Considerable information is available on the design of wetland treatment systems in south Florida. Model equations have been presented in an August 1995 paper authored by Dr. William J. Walker, Jr., entitled "Design Basis for Everglades Stormwater Treatment Areas." Those equations were used in this project to size the STAs to achieve specific P removal objectives.

A schematic of this treatment technology is illustrated in Figure 4.1. Water is supplied to an STA via pumped flows of runoff (in the EAA this could occur through existing C&SF flood control pumping stations). The frequency and quantity of runoff waters treated is a function of pumping station capacity, conveyance systems, treatment area hydraulics, and overall system flow

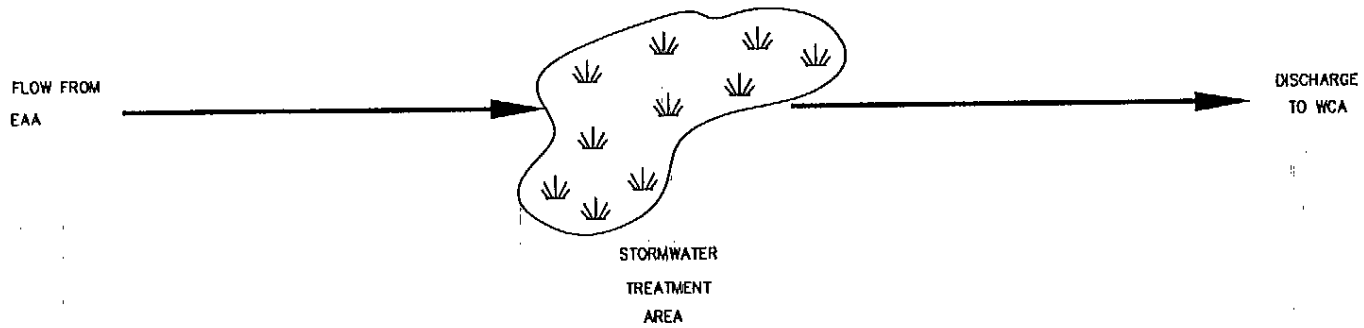

FIGURE. 4.1
STORMWATER TREATMENT AREAS

PEER/Brown and Caldwell
Consultants

management. An STA is a passive treatment system. Water flows from inflow pumping stations, through supply canals into a distribution canal where it is distributed into the upstream, or headwater portion of the treatment areas (or cells). Flow through the wetland marsh is accomplished passively by gravity. Phosphorus is taken up by the wetland vegetation and is stored in the muck soils. Flow passing through the STA is collected in an effluent canal and is pumped out of the treatment system directly into a conservation area or into a receiving canal.

Vegetation in an STA is not planted, but grows in naturally. While portions of the ENR Project were planted to promote some specific plant types, a large majority of the area is growing in like the STAs will, in a passive evolutionary manner. The ENR Project presently has a diverse variety of plant communities, and is continuing to develop into a mature wetland.

There are numerous documented studies of P removal in emergent wetlands from 150 ppb to the 50 ppb level and less. Probably the most relevant is the initial results from the ENR Project. First year results (1995) indicated that even lower effluent P concentrations may be consistently achievable. For the purposes of this evaluation, it was assumed that the STAs may be able to achieve 30 ppb on a consistent basis, although documentation to this effect is much more limited than at 50 ppb.

BASIS OF EVALUATION

The STAs were evaluated on the basis of the Walker model, design criteria used by Brown and Caldwell and others for STAs currently under design, and water quality data from the ENR Project. For the purposes of this evaluation, STAs were assumed not to be capable of achieving effluent P concentrations below 30 ppb on a long term average basis. Other general assumptions and evaluation procedures were described previously in Chapter 3, Methodology.

The STAs were sized to achieve 50 ppb, 40 ppb and 30 ppb effluent P concentrations assuming influent P concentrations of 150 ppb and 90 ppb. STA treatment areas ranged in size from 4,040 acres, to reduce P concentration from 90 ppb to 50 ppb, to 11,020 acres to reduce P concentration from 150 ppb to 30 ppb. Table 4.1-1 summarizes design information for STAs.

ECONOMIC ANALYSIS

Estimates of capital costs, O&M costs, replacement costs, and salvage values were prepared for each STA treatment alternative considered in this evaluation. These estimates were generated according to the methodology discussed previously in Chapter 3. Based on these costs, a 50-year present worth cost was computed for each alternative. Table 4.1-1 provides a cost summary for STAs at the various P removal scenarios.

Table 4.1-1. Basis of Design and Cost Information for Stormwater Treatment Areas (STAs)

Parameter	Influent/Effluent P Levels									
	150/50	150/40	150/30	150/20	150/10	90/50	90/40	90/30	90/20	90/10
Basis of Design										
Influent PS capacity, mgd	2330	2330	2330	0	0	2330	2330	2330	0	0
Influent PS average flow, mgd	189	189	189	0	0	189	189	189	0	0
STA area, acres	7410	8965	11020	0	0	4040	5620	7695	0	0
FEB area, acres	0	0	0	0	0	0	0	0	0	0
Treatment plant influent PS capacity, mgd	0	0	0	0	0	0	0	0	0	0
Treatment plant influent PS average flow, mgd	0	0	0	0	0	0	0	0	0	0
Treatment plant land area, acres	0	0	0	0	0	0	0	0	0	0
Sludge disposal area, acres	0	0	0	0	0	0	0	0	0	0
Effluent PS capacity, mgd	2330	2330	2330	0	0	2330	2330	2330	0	0
Effluent PS average flow, mgd	189	189	189	0	0	189	189	189	0	0
Total land area, acres	8151	9861.5	12122	0	0	4444	6182	8464.5	0	0
Capital Costs, $ million										
Influent pumping station	17.87	17.87	17.87	0.00	0.00	17.87	17.87	17.87	0.00	0.00
STA	33.96	41.09	50.50	0.00	0.00	18.52	25.76	35.27	0.00	0.00
STA seepage pump station	0.78	0.95	1.17	0.00	0.00	0.43	0.59	0.81	0.00	0.00
FEB	0.00	0.00	0.00	0.00	0.00	0.00	0.00	0.00	0.00	0.00
FEB seepage pump station	0.00	0.00	0.00	0.00	0.00	0.00	0.00	0.00	0.00	0.00
Treatment plant influent pump station	0.00	0.00	0.00	0.00	0.00	0.00	0.00	0.00	0.00	0.00
Treatment plant	0.00	0.00	0.00	0.00	0.00	0.00	0.00	0.00	0.00	0.00
Sludge treatment and disposal	0.00	0.00	0.00	0.00	0.00	0.00	0.00	0.00	0.00	0.00
Effluent pump station	17.87	17.87	17.87	0.00	0.00	17.87	17.87	17.87	0.00	0.00
Subtotal	70.49	77.78	87.41	0.00	0.00	54.68	62.09	71.82	0.00	0.00
Construction contingencies (20 percent)	14.10	15.56	17.48	0.00	0.00	10.94	12.42	14.36	0.00	0.00
Subtotal, construction costs	84.58	93.33	104.90	0.00	0.00	65.62	74.51	86.19	0.00	0.00
Engineering (15 percent)	12.69	14.00	15.73	0.00	0.00	9.84	11.18	12.93	0.00	0.00
Land purchase - STA	28.53	34.52	42.43	0.00	0.00	15.55	21.64	29.63	0.00	0.00
Land purchase - FEB	0.00	0.00	0.00	0.00	0.00	0.00	0.00	0.00	0.00	0.00
Land purchase - treatment plant	0.00	0.00	0.00	0.00	0.00	0.00	0.00	0.00	0.00	0.00
Land purchase - sludge disposal	0.00	0.00	0.00	0.00	0.00	0.00	0.00	0.00	0.00	0.00
Total Capital Cost	125.80	141.85	163.06	0.00	0.00	91.02	107.33	128.74	0.00	0.00
Present Worth - Capital Cost	125.80	141.85	163.06	0.00	0.00	91.02	107.33	128.74	0.00	0.00
O&M Costs, $ million/yr										
Influent pumping station	0.52	0.52	0.52	0.00	0.00	0.52	0.52	0.52	0.00	0.00
STA	0.22	0.27	0.33	0.00	0.00	0.12	0.17	0.23	0.00	0.00
STA seepage pump station	0.12	0.15	0.18	0.00	0.00	0.07	0.10	0.13	0.00	0.00
STA sampling and monitoring	0.30	0.30	0.30	0.00	0.00	0.30	0.30	0.30	0.00	0.00
FEB	0.00	0.00	0.00	0.00	0.00	0.00	0.00	0.00	0.00	0.00
FEB seepage pump station	0.00	0.00	0.00	0.00	0.00	0.00	0.00	0.00	0.00	0.00
Treatment plant influent pump station	0.00	0.00	0.00	0.00	0.00	0.00	0.00	0.00	0.00	0.00
Chemicals	0.00	0.00	0.00	0.00	0.00	0.00	0.00	0.00	0.00	0.00
Sludge treatment and disposal	0.00	0.00	0.00	0.00	0.00	0.00	0.00	0.00	0.00	0.00
Other treatment plant O&M	0.00	0.00	0.00	0.00	0.00	0.00	0.00	0.00	0.00	0.00
Treatment plant sampling and monitoring	0.00	0.00	0.00	0.00	0.00	0.00	0.00	0.00	0.00	0.00
Effluent pump station	0.52	0.52	0.52	0.00	0.00	0.52	0.52	0.52	0.00	0.00
Total Annual O&M Cost	1.69	1.76	1.86	0.00	0.00	1.54	1.61	1.71	0.00	0.00
Present Worth - Annual O&M Cost	36.40	37.91	39.92	0.00	0.00	33.11	34.65	36.67	0.00	0.00
Present Worth - Replacement Costs, $million										
Infuent pump station	1.68	1.68	1.68	0.00	0.00	1.68	1.68	1.68	0.00	0.00
STA seepage pump station	0.15	0.18	0.22	0.00	0.00	0.08	0.11	0.15	0.00	0.00
FEB seepage pump station	0.00	0.00	0.00	0.00	0.00	0.00	0.00	0.00	0.00	0.00
Treatment plant influent pump station	0.00	0.00	0.00	0.00	0.00	0.00	0.00	0.00	0.00	0.00
Chemical feed system	0.00	0.00	0.00	0.00	0.00	0.00	0.00	0.00	0.00	0.00
Other major treatment plant equipment	0.00	0.00	0.00	0.00	0.00	0.00	0.00	0.00	0.00	0.00
Sludge treatment and disposal	0.00	0.00	0.00	0.00	0.00	0.00	0.00	0.00	0.00	0.00
Effluent pump station	1.68	1.68	1.68	0.00	0.00	1.68	1.68	1.68	0.00	0.00
Total Present Worth - Replacement Costs	3.50	3.53	3.57	0.00	0.00	3.43	3.46	3.50	0.00	0.00
Salvage Value, $ million										
Influent pump station demolition cost	(3.57)	(3.57)	(3.57)	0.00	0.00	(3.57)	(3.57)	(3.57)	0.00	0.00
STA seepage pump station demolition cost	(0.16)	(0.19)	(0.23)	0.00	0.00	(0.09)	(0.12)	(0.16)	0.00	0.00
FEB seepage pump station demolition cost	0.00	0.00	0.00	0.00	0.00	0.00	0.00	0.00	0.00	0.00
Treatment plant influent pump station demolition cost	0.00	0.00	0.00	0.00	0.00	0.00	0.00	0.00	0.00	0.00
Treatment plant demolition cost	0.00	0.00	0.00	0.00	0.00	0.00	0.00	0.00	0.00	0.00
Effluent pump station demolition cost	(3.57)	(3.57)	(3.57)	0.00	0.00	(3.57)	(3.57)	(3.57)	0.00	0.00
STA restoration cost	(4.08)	(4.49)	(4.98)	0.00	0.00	(3.01)	(3.56)	(4.16)	0.00	0.00
FEB restoration cost	0.00	0.00	0.00	0.00	0.00	0.00	0.00	0.00	0.00	0.00
Sludge land restoration cost	0.00	0.00	0.00	0.00	0.00	0.00	0.00	0.00	0.00	0.00
STA land value	28.53	34.52	42.43	0.00	0.00	15.55	21.64	29.63	0.00	0.00
FEB land value	0.00	0.00	0.00	0.00	0.00	0.00	0.00	0.00	0.00	0.00
Treatment plant land value	0.00	0.00	0.00	0.00	0.00	0.00	0.00	0.00	0.00	0.00
Sludge land value	0.00	0.00	0.00	0.00	0.00	0.00	0.00	0.00	0.00	0.00
Net Salvage Value	17.14	22.69	30.07	0.00	0.00	5.31	10.81	18.15	0.00	0.00
Present Worth - Salvage Value	2.41	3.19	4.23	0.00	0.00	0.75	1.52	2.55	0.00	0.00
50 - Year Present Worth, $ million										
Capital Cost	125.80	141.85	163.06	0.00	0.00	91.02	107.33	128.74	0.00	0.00
O&M Cost	36.40	37.91	39.92	0.00	0.00	33.11	34.65	36.67	0.00	0.00
Replacement Cost	3.50	3.53	3.57	0.00	0.00	3.43	3.46	3.50	0.00	0.00
Salvage Value	(2.41)	(3.19)	(4.23)	0.00	0.00	(0.75)	(1.52)	(2.55)	0.00	0.00
Total	163.28	180.10	202.31	0.00	0.00	126.81	143.92	166.36	0.00	0.00
Present worth, $/million gallons treated	47.34	52.21	58.65	0.00	0.00	36.77	41.72	48.23	0.00	0.00
Present worth, $/pound P removed	56.76	56.91	58.61	0.00	0.00	110.21	100.06	96.39	0.00	0.00

Capital Costs

Capital costs for the STAs were estimated to range from about $91 million for the 4,040-acre STA reducing P from 90 ppb to 50 ppb to about $163 million for the 11,020-acre STA reducing P from 150 ppb to 30 ppb.

O&M Costs

Annual O&M costs for the STA treatment train were estimated to range from about $1.5 million for the 4,040-acre STA reducing P from 90 ppb to 50 ppb to about $1.9 million for the 11,020-acre STA reducing P from 150 ppb to 30 ppb. The 50-year present worth O&M costs ranged from $33 million to $41 million.

Replacement Costs

Replacement costs for STAs are limited to the replacement of pumping equipment in the influent and effluent pumping stations and the STA seepage pumping station. The 50-year present worth of these replacement costs averaged $3.6 million for all of the STA treatment alternatives considered in this evaluation.

Salvage Value

Salvage value for the STA treatment alternatives was calculated by subtracting the costs of pumping station demolition and land restoration from the value of the land (assumed to be equal to the original purchase price). Demolition and land restoration costs were estimated to range from about $10.2 million to about $12.4 million depending upon the size of the STA involved. The land value for the STA ranges from about $15.6 million to $42.4 million, depending upon the size of the STA. This resulted in net salvage values of about $5.3 million for the smallest STA to about $30 million for the largest STA at the end of 50 years.

Present Worth

Estimates of 50-year present worth costs for the STA treatment technology ranged from about $127 million to about $202 million. This equated to ranges of about $37 to $59 per million gallons of water treated, and about $57 to $110 per pound of P removed over the 50-year period.

NON-ECONOMIC ANALYSIS

The following section provides a discussion of the non-economic criteria considered in this investigation. These criteria include water quality and other non-economic issues such as robustness, hydropattern restoration, by-product generation, permittability, impact to the C&SF project, compliance with the EFA , and compliance with the federal consent decree.

Water Quality Analysis

A conceptual level effluent water quality characterization was developed for the STA treatment technology. The water quality parameters evaluated included nutrients (phosphorus and nitrogen), metals, and other constituents, such as alkalinity, total dissolved solids (TDS), and total organic carbon (TOC). Methyl mercury was specifically included in the water quality evaluation because of its importance as a constituent of concern in South Florida. Data from the ENR Project (South Florida Water Management District, 1996) indicate that STAs have the capability to remove methyl mercury.

Effluent water quality characteristics for the STAs were estimated for influent P of 150 and 90 ppb and effluent P concentrations of 50, 40 and 30 ppb. In the 150 ppb P influent, the concentrations of non-P parameters were taken to be similar to the 1995 average concentrations experienced in the ENR Project as summarized in the Everglades Nutrient Removal Project 1995 Monitoring Report (South Florida Water Management District, 1996). In the 90 ppb P influent, the concentrations of non-P parameters were assumed to be similar to the average concentrations measured in the August 1994-August 1995 grab samples at Sampling Station G252C, which is located immediately after the buffer zone in Cell 1 of the ENR Project (South Florida Water Management District, undated). The assumed composition of 90 ppb P influent is speculative because it is based on grab samples within ENR only and may not be representative of EAA runoff following full implementation of BMPs.

Calculation Procedures. Concentrations of P in the wetlands effluent were set at the effluent goal, and the wetlands were sized to achieve that goal using the Walker equation. For example, the Walker equation predicts a 7,410-acre wetland can reduce P from 150 ppb to 50 ppb. The concentrations of non-P parameters were estimated by applying the ratio of "ENR effluent concentration/ENR influent concentration" (as determined by 1995 ENR operations) to anticipated influent composition. Using aluminum as an example, and applying the ENR concentration ratio described above (0.067) to the anticipated STA influent aluminum concentration (297 ppb) gives an STA effluent aluminum concentration of 20 ppb.

Tables 4.1-2 and 4.1-3 show expected water constituent composition for the conditions examined.

General Effects of STA Treatment on Water Quality. Table 4.1-4 shows changes in water quality caused by treatment with STAs. It compares untreated water constituent composition with

composition of effluent from the STAs for the scenario in which a 150 ppb P influent is treated to 50 ppb. It shows the changes in terms of (1) concentration differences, with negative numbers signifying concentration decreases and positive numbers signifying concentration increases, and (2) the ratio of effluent concentration to influent concentration. Such information is generally useful, since it can be applied (with caution) to EAA waters of somewhat different composition than waters being treated at the ENR Project.

Table 4.1-4 shows that STAs can remove high percentages of P, ammonia, and nitrate. STAs also remove metals well, except possibly manganese, which appears to increase based on data from the ENR Project. It removes about 60 and 70 percent of the mercury and methyl mercury, respectively. Sulfate is moderately reduced. Chloride, sodium, and TDS increase moderately, and alkalinity and TOC increase slightly. Experience indicates that STAs will provide high removals of turbidity and suspended solids.

Other Non-Economic Criteria

Robustness. The STAs, by virtue of their large treatment areas, provide significant flow equalization capacity and the opportunity to accommodate varying water depths during extreme runoff events. During periods of prolonged drought, precautions must be taken to avoid drying of the STAs which could result in re-release of phosphorus from the sediments. When flows greatly exceed the design flow, the STA phosphorus removal capability may be temporarily impaired. Phosphorus removal capacity, however, is expected to be restored when normal flows are attained.

Hydropattern Restoration. Due to the size and storage capacity of the STAs, there will be a great amount of flexibility in controlling effluent discharges to the water conservation areas, thus having a significant potential to assist in hydropattern restoration.

Byproduct Generation. Chemicals and other chemical treatment residuals or byproducts are not generated from the STAs. Therefore, there will be no chemical byproduct generation.

Permittability. Because of the technical, legal, and regulatory ground work that has already been done for the STAs, the ability for this treatment train to be permitted considering current legal issues is relatively certain. It is probable that the STAs will pass the "public interest test" required to obtain federal approvals. STAs are perceived as being compatible with potential future public works projects and could have a secondary benefit of use by wildlife.

Table 4.1-2. Predicted Effluent Water Quality For Stormwater Treatment Areas with Influent P = 150 ppb

Parameter	Unit	Influent Concentration[a]	Predicted Effluent Water Quality For Influent/Effluent Levels				
			150/50	150/40	150/30	150/20	150/10
Nutrients:							
Total phosphorus	ug/L	150	50	40	30		
Ammonia nitrogen	ug/L	440	50	50	50		
Total Kjeldahl nitrogen	ug/L	2700	2100	2100	2100		
Nitrate nitrogen	ug/L	450	40	40	40		
Nitrite nitrogen	ug/L	70	1	1	1		
Total nitrogen	ug/L	3220	2140	2140	2140		
Metals:							
Aluminum	ug/L	297	20	20	20		
Copper[b]	ug/L						
Iron	ug/L	358	36	36	36		
Manganese	ug/L	17	27	27	27		
Mercury (total)	ug/L	2.2E-03	9.1E-04	9.1E-04	9.1E-04		
Mercury (methyl)	ug/L	2.0E-04	6.0E-05	6.0E-05	6.0E-05		
Zinc	ug/L	5	3	3	3		
Ions:							
Sulfate	mg/L	63	55	55	55		
Silica	mg/L	27	27	27	27		
Chloride	mg/L	134	157	157	157		
Calcium	mg/L	75	75	75	75		
Magnesium	mg/L	23	23	23	23		
Sodium	mg/L	90	107	107	107		
Potassium	mg/L	7	7	7	7		
Others:							
Alkalinity as $CaCO_3$	mg/L	241	246	246	246		
pH	s.u.	7	7	7	7		
Specific conductance[b]	umho/cm						
Total dissolved solids	mg/L	659	697	697	697		
Total organic carbon	mg/L	38	41	41	41		

[a] Source: Everglades Nutrient Removal Project 1995 Monitoring Report published by the South Florida Water Management District. P concentrations are influent/effluent concentrations evaluated in this study.

[b] Water quality analysis for this parameter in progress at time of final report production

Table 4.1-3. Predicted Effluent Water Quality For Stormwater Treatment Areas with Influent P = 90 ppb

Parameter	Unit	Influent Concentration[a]	Predicted Effluent Water Quality For Influent/Effluent Levels				
			90/50	90/40	90/30	90/20	90/10
Nutrients:							
Total phosphorus	ug/L	90	50	40	30		
Ammonia nitrogen	ug/L	160	20	20	20		
Total Kjeldahl nitrogen	ug/L	2700	2100	2100	2100		
Nitrate nitrogen	ug/L	250	10	10	10		
Nitrite nitrogen	ug/L	70	0	0	0		
Total nitrogen	ug/L	3020	2110	2110	2110		
Metals:							
Aluminum	ug/L	100	7	7	7		
Copper[b]	ug/L						
Iron	ug/L	100	12	12	12		
Manganese	ug/L	12	20	20	20		
Mercury (total)	ug/L	1.8E-03	7.4E-04	7.4E-04	7.4E-04		
Mercury (methyl)	ug/L	1.6E-04	4.8E-05	4.8E-05	4.8E-05		
Zinc	ug/L	3	2	2	2		
Ions:							
Sulfate	mg/L	73	64	64	64		
Silica	mg/L	22	22	22	22		
Chloride	mg/L	183	214	214	214		
Calcium	mg/L	81	81	81	81		
Magnesium	mg/L	26	26	26	26		
Sodium	mg/L	119	142	142	142		
Potassium	mg/L	10	10	10	10		
Others:							
Alkalinity as $CaCO_3$	mg/L	275	281	281	281		
pH	s.u.	7	7	7	7		
Specific conductance[b]	umho/cm						
Total dissolved solids	mg/L	720	763	763	763		
Total organic carbon	mg/L	40	43	43	43		

[a] Source: Unpublished water quality data (except P concentrations) for period August 1994 - August 1995 at sample station G252C, South Florida Water Management District.

[b] Water quality analysis for this parameter in progress at time of final report production

Table 4.1-4. Effect of Stormwater Treatment Areas on Water Quality

Parameter	Unit	Concentration change caused by treatment	Ratio of effluent concentration to concentration in EAA raw water
Nutrients:			
Total phosphorus	ug/L	100	0.333
Ammonia nitrogen	ug/L	-389	0.116
Total Kjeldahl nitrogen	ug/L	-600	0.778
Nitrate nitrogen	ug/L	-415	0.078
Nitrite nitrogen	ug/L	-69	0.014
Total nitrogen	ug/L	-1,084	0.663
Metals:			
Aluminum	ug/L	-277	0.067
Copper[a]	ug/L		
Iron	ug/L	-322	0.101
Manganese	ug/L	10	1.588
Mercury (total)	ug/L	-1.3E-03	0.414
Mercury (methyl)	ug/L	-1.4E-04	0.300
Zinc	ug/L	-2	0.600
Ions:			
Sulfate	mg/L	-8	0.873
Silica	mg/L	0	1.000
Chloride	mg/L	23	1.172
Calcium	mg/L	0	1.000
Magnesium	mg/L	0	1.000
Sodium	mg/L	17	1.189
Potassium	mg/L	0	1.000
Others:			
Alkalinity as $CaCO_3$	mg/L	5	1.021
pH	s.u.	0	1.000
Specific conductance[a]	umho/cm		
Total dissolved solids	mg/L	38	1.058
Total organic carbon	mg/L	3	1.079

[a] Water quality analysis for this parameter in progress at time of final report production

Impact on C&SF Project. With respect to water supply, there is a potential for the STAs to adversely impact the C&SF Project. During dry periods, water may need to be added to prevent the STAs from drying out which could result in re-release of precipitated phosphorus. In this case, the STAs would be a net user of water and would have an adverse impact on the water supply. Due to their size and capacity, however, the ability of the STAs to attenuate peak flow rates and store water for later release could improve current conditions.

Compliance with EFA. STAs would meet the policy of the EFA, since the EFA includes STAs. The total implementation time for the construction of the STAs meets the schedule set by the EFA. The STAs, however, have not been shown to achieve an effluent P concentration of 10 ppb which has been set as the Phase II default effluent P concentration by the EFA.

Compliance with Federal Consent Decree. Again, since STAs are the basis for the standards set in the Federal Consent Decree, implementation of this treatment technology would be consistent with the requirements of the Consent Decree.

RESEARCH PRIORITIES

Performance of the STAs in treating runoff from the EAA is by far the most documented of any of the treatment technologies being investigated in this evaluation. Ongoing research activities in the ENR will continue over the next several years to advance the knowledge needed for more efficient and effective designs. Specifically, relationships between P removal and loading rate, detention time, and operating water depth should be refined.

4.2 MANAGED WETLANDS

SECTION 4.2

MANAGED WETLANDS

DESCRIPTION

In the Managed Wetlands treatment train, chemical treatment is located upstream of an STA to provide a mechanism for controlling the P load to the STA and to increase the performance reliability of the overall treatment system. By adding the chemical treatment step ahead of the wetlands, a percentage of the phosphorus is removed prior to the flow being introduced into the STA. This reduces the land area required for the STA and also provides an effluent that has been "conditioned" for discharge into downstream conservation areas. On the other hand, putting the chemical treatment step first limits the overall P removal capability of the treatment train to that achievable by the STA alone. Current data from the ENR project suggests that STAs may be able to reduce P concentrations to 30 ppb (or possibly lower) instead of the 50 ppb which was previously suspected to be the limit of their P removal capability.

A schematic of the treatment train is illustrated in Figure 4.2. Influent is pumped into a flow equalization basin (FEB), and then into a chemical treatment facility, consisting of chemical addition, rapid mixing, flocculation, and solids separation in sedimentation tanks or lined earthen basins. Iron salts are used to precipitate out phosphorus to the desired loading for introduction into the STA. Settled solids accumulated in the sedimentation basins are removed by periodic pumping or dredging and conveyed to dedicated land disposal sites.

Effluent from the chemical treatment facility flows, by gravity, to a distribution canal and into an STA. Phosphorus is taken up by the wetland vegetation and is stored in the muck soils. Flow passing through the STA is collected in an effluent canal and is pumped out of the treatment system directly into a conservation area or into a receiving canal.

The managed wetlands treatment train offers flexibility in how phosphorus removal is accomplished. Chemical treatment has the capability to reduce phosphorus concentrations to very low levels depending on the solids separation process employed. With the sedimentation process assumed in this evaluation, an effluent phosphorus concentration of 30 to 35 ppb is realistic for the chemical treatment component. The influent phosphorus concentration has little impact on the ability of chemical treatment to achieve the desired effluent P concentration. However, chemical utilization and sludge production increase as the total pounds of phosphorus removed becomes greater.

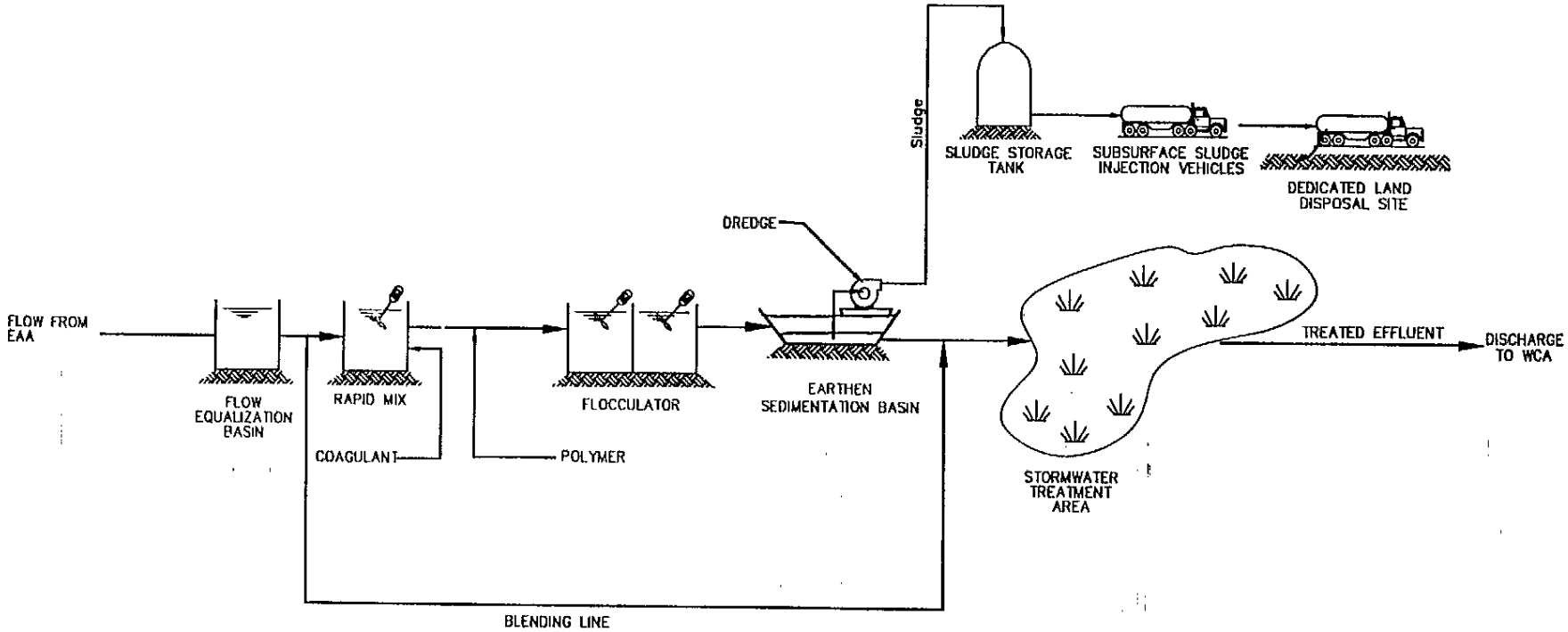

PEER/Brown and Caldwell
Consultants

FIGURE. 4.2
MANAGED WETLANDS

STAs have been shown, statistically, to have the capability to achieve long-term average effluent P concentrations of 50 ppb. Recent data from the ENR Project, however, suggests that STAs may have the capability to achieve long term average effluent P concentrations of 30 ppb or even less. The influent P concentration and the desired effluent P concentration affect the sizing of the STA. For the purposes of this evaluation, however, STAs are assumed to have the ability to accept influent with P concentrations of 150 ppb (or more) and to achieve effluent P concentrations as low as 30 ppb.

BASIS OF EVALUATION

For the P reduction scenarios involving 150 ppb influent P, it was assumed that the chemical treatment component of the treatment train would reduce P from 150 ppb to 75 ppb (50 percent removal) and that the STA would be sized to reduce P from 75 ppb down to the desired final effluent P concentration. For the P reduction scenarios involving 90 ppb influent P, it was assumed that the chemical treatment component would reduce P down to 60 ppb (33 percent reduction) and that the STA would be sized to reduce P from 60 ppb down to the desired final effluent P concentration.

The chemical treatment component was sized to achieve 50 and 33 percent P removal assuming that an FEB would be constructed as part of the treatment facility in both cases. This was necessary for sizing of the chemical treatment component of this treatment train to be consistent with sizing of the chemical treatment component of other treatment trains involving chemical treatment. For a P reduction of 50 percent, from 150 ppb to 75 ppb, it was determined that a 300 acre FEB and a 160-mgd chemical treatment facility would be required. For a P reduction of 33 percent, from 90 ppb to 60 ppb, it was determined that a 100-acre FEB and a 90-mgd chemical treatment facility would be required.

STA treatment area requirements were estimated according to the model developed by Walker. Treatment areas ranged from 1,350 acres to 6,600 acres. Table 4.2-1 provides a basis-of-design summary for Managed Wetlands.

ECONOMIC ANALYSIS

Estimates of capital costs, O&M costs, replacement costs and salvage value were prepared for each Managed Wetland treatment alternative considered in this evaluation. Based on these cost estimates, a 50-year present worth was computed for each alternative. The methods, procedures, and cost factors used in making the estimates were discussed previously in Chapter 3. Table 4.2-1 provides a summary of the cost information for the Managed Wetland technology at the various P removal scenarios.

Table 4.2-1. Basis of Design and Cost Information for Managed Wetlands

Parameter	Influent/Effluent P Levels									
	150/50	150/40	150/30	150/20	150/10	90/50	90/40	90/30	90/20	90/10
Basis of Design										
Influent PS capacity, mgd	2330	2330	2330	0	0	2330	2330	2330	0	0
Influent PS average flow, mgd	189	189	189	0	0	189	189	189	0	0
STA area, acres	2800	4400	6600	0	0	1350	3000	5100	0	0
FEB area, acres	300	300	300	0	0	100	100	100	0	0
Treatment plant influent PS capacity, mgd	202	202	202	0	0	105	105	105	0	0
Treatment plant influent PS average flow, mgd	109	109	109	0	0	65	65	65	0	0
Treatment plant land area, acres	21	21	21	0	0	11	11	11	0	0
Sludge disposal area, acres	229	229	229	0	0	137	137	137	0	0
Effluent PS capacity, mgd	2330	2330	2330	0	0	2330	2330	2330	0	0
Effluent PS average flow, mgd	189	189	189	0	0	189	189	189	0	0
Total land area, acres	3,685	5,445	7,865	0	0	1,757	3,572	5,882	0	0
Capital Costs, $ million										
Influent pumping station	17.87	17.87	17.87	0.00	0.00	17.87	17.87	17.87	0.00	0.00
STA	12.83	20.17	30.25	0.00	0.00	6.19	13.75	23.37	0.00	0.00
STA seepage pump station	0.30	0.47	0.70	0.00	0.00	0.14	0.32	0.54	0.00	0.00
FEB	2.48	2.48	2.48	0.00	0.00	0.83	0.83	0.83	0.00	0.00
FEB seepage pump station	0.06	0.06	0.06	0.00	0.00	0.02	0.02	0.02	0.00	0.00
Treatment plant influent pump station	1.94	1.94	1.94	0.00	0.00	1.01	1.01	1.01	0.00	0.00
Treatment plant	17.26	17.26	17.26	0.00	0.00	10.27	10.27	10.27	0.00	0.00
Sludge treatment and disposal	0.64	0.64	0.64	0.00	0.00	0.56	0.56	0.56	0.00	0.00
Effluent pump station	17.87	17.87	17.87	0.00	0.00	17.87	17.87	17.87	0.00	0.00
Subtotal	71.25	78.75	89.06	0.00	0.00	54.76	62.49	72.34	0.00	0.00
Construction contingencies (20 percent)	14.25	15.75	17.81	0.00	0.00	10.95	12.50	14.47	0.00	0.00
Subtotal, construction costs	85.50	94.50	106.88	0.00	0.00	65.71	74.99	86.81	0.00	0.00
Engineering (15 percent)	12.82	14.17	16.03	0.00	0.00	9.86	11.25	13.02	0.00	0.00
Land purchase - STA	10.78	16.94	25.41	0.00	0.00	5.20	11.55	19.64	0.00	0.00
Land purchase - FEB	1.16	1.16	1.16	0.00	0.00	0.39	0.39	0.39	0.00	0.00
Land purchase - treatment plant	0.08	0.08	0.08	0.00	0.00	0.04	0.04	0.04	0.00	0.00
Land purchase - sludge disposal	0.88	0.88	0.88	0.00	0.00	0.53	0.53	0.53	0.00	0.00
Total Capital Cost	111.22	127.73	150.44	0.00	0.00	81.71	98.74	120.42	0.00	0.00
Present Worth - Capital Cost	111.22	127.73	150.44	0.00	0.00	81.71	98.74	120.42	0.00	0.00
O&M Costs, $ million/yr										
Influent pumping station	0.52	0.52	0.52	0.00	0.00	0.52	0.52	0.52	0.00	0.00
STA	0.08	0.13	0.20	0.00	0.00	0.04	0.09	0.15	0.00	0.00
STA seepage pump station	0.05	0.08	0.11	0.00	0.00	0.03	0.06	0.09	0.00	0.00
STA sampling and monitoring	0.30	0.30	0.30	0.00	0.00	0.30	0.30	0.30	0.00	0.00
FEB	0.02	0.02	0.02	0.00	0.00	0.01	0.01	0.01	0.00	0.00
FEB seepage pump station	0.02	0.02	0.02	0.00	0.00	0.01	0.01	0.01	0.00	0.00
Treatment plant influent pump station	0.35	0.35	0.35	0.00	0.00	0.29	0.29	0.29	0.00	0.00
Chemicals	1.90	1.90	1.90	0.00	0.00	1.13	1.13	1.13	0.00	0.00
Sludge treatment and disposal	0.13	0.13	0.13	0.00	0.00	0.08	0.08	0.08	0.00	0.00
Other treatment plant O&M	0.32	0.32	0.32	0.00	0.00	0.19	0.19	0.19	0.00	0.00
Treatment plant sampling and monitoring	0.15	0.15	0.15	0.00	0.00	0.15	0.15	0.15	0.00	0.00
Effluent pump station	0.52	0.52	0.52	0.00	0.00	0.52	0.52	0.52	0.00	0.00
Total Annual O&M Cost	4.36	4.43	4.53	0.00	0.00	3.27	3.35	3.44	0.00	0.00
Present Worth - Annual O&M Cost	93.66	95.22	97.37	0.00	0.00	70.30	71.91	73.95	0.00	0.00
Present Worth - Replacement Costs, $million										
Influent pump station	1.68	1.68	1.68	0.00	0.00	1.68	1.68	1.68	0.00	0.00
STA seepage pump station	0.06	0.09	0.13	0.00	0.00	0.03	0.06	0.10	0.00	0.00
FEB seepage pump station	0.01	0.01	0.01	0.00	0.00	0.00	0.00	0.00	0.00	0.00
Treatment plant influent pump station	0.36	0.36	0.36	0.00	0.00	0.19	0.19	0.19	0.00	0.00
Chemical feed system	0.25	0.25	0.25	0.00	0.00	0.15	0.15	0.15	0.00	0.00
Other major treatment plant equipment	2.87	2.87	2.87	0.00	0.00	1.71	1.71	1.71	0.00	0.00
Sludge treatment and disposal	0.11	0.11	0.11	0.00	0.00	0.09	0.09	0.09	0.00	0.00
Effluent pump station	1.68	1.68	1.68	0.00	0.00	1.68	1.68	1.68	0.00	0.00
Total Present Worth - Replacement Costs	7.01	7.04	7.09	0.00	0.00	5.52	5.55	5.60	0.00	0.00
Salvage Value, $ million										
Influent pump station demolition cost	(3.57)	(3.57)	(3.57)	0.00	0.00	(3.57)	(3.57)	(3.57)	0.00	0.00
STA seepage pump station demolition cost	(0.06)	(0.09)	(0.14)	0.00	0.00	(0.03)	(0.06)	(0.11)	0.00	0.00
FEB seepage pump station demolition cost	(0.01)	(0.01)	(0.01)	0.00	0.00	(0.00)	(0.00)	(0.00)	0.00	0.00
Treatment plant influent pump station demolition cost	(0.39)	(0.39)	(0.39)	0.00	0.00	(0.20)	(0.20)	(0.20)	0.00	0.00
Treatment plant demolition cost	(3.45)	(3.45)	(3.45)	0.00	0.00	(2.05)	(2.05)	(2.05)	0.00	0.00
Effluent pump station demolition cost	(3.57)	(3.57)	(3.57)	0.00	0.00	(3.57)	(3.57)	(3.57)	0.00	0.00
STA restoration cost	(2.51)	(3.15)	(3.85)	0.00	0.00	(1.74)	(2.60)	(3.39)	0.00	0.00
FEB restoration cost	(1.10)	(1.10)	(1.10)	0.00	0.00	(0.63)	(0.63)	(0.63)	0.00	0.00
Sludge land restoration cost	0.00	0.00	0.00	0.00	0.00	0.00	0.00	0.00	0.00	0.00
STA land value	10.78	16.94	25.41	0.00	0.00	5.20	11.55	19.64	0.00	0.00
FEB land value	1.16	1.16	1.16	0.00	0.00	0.39	0.39	0.39	0.00	0.00
Treatment plant land value	0.08	0.08	0.08	0.00	0.00	0.04	0.04	0.04	0.00	0.00
Sludge land value	0.00	0.00	0.00	0.00	0.00	0.00	0.00	0.00	0.00	0.00
Net Salvage Value	(2.65)	2.84	10.56	0.00	0.00	(6.19)	(0.73)	6.53	0.00	0.00
Present Worth - Salvage Value	(0.37)	0.40	1.49	0.00	0.00	(0.87)	(0.10)	0.92	0.00	0.00
50 - Year Present Worth, $ million										
Capital Cost	111.22	127.73	150.44	0.00	0.00	81.71	98.74	120.42	0.00	0.00
O&M Cost	93.66	95.22	97.37	0.00	0.00	70.30	71.91	73.95	0.00	0.00
Replacement Cost	7.01	7.04	7.09	0.00	0.00	5.52	5.55	5.60	0.00	0.00
Salvage Value	0.37	(0.40)	(1.49)	0.00	0.00	0.87	0.10	(0.92)	0.00	0.00
Total	212.26	229.59	253.40	0.00	0.00	158.40	176.31	199.05	0.00	0.00
Present worth, $/million gallons treated	61.54	66.56	73.47	0.00	0.00	45.92	51.11	57.71	0.00	0.00
Present worth, $/pound P removed	73.79	72.56	73.41	0.00	0.00	137.66	122.58	115.32	0.00	0.00

Capital Costs

Capital costs for the Managed Wetlands treatment technology were estimated to range from about $82 million for the 90/50 P removal scenario to about $150 million for the 150/30 P removal scenario.

O&M Costs

Annual O&M costs for the managed Wetlands treatment technology were estimated to range from about $3.3 million for the 90/50 P removal scenario to about $4.5 million for the 150/30 P removal scenario.

Replacement Costs

Present worth replacement costs for the Managed Wetlands treatment technology were estimated at about $5.5 million for the scenarios involving influent P of 90 ppb and about $7.0 million for the scenarios involving influent P of 150 ppb.

Salvage Value

Demolition costs associated with the pumping stations and the chemical treatment plant and restoration costs for STA and FEB land were subtracted from the value of the land at the end of 50 years (assumed to be equal to the original purchase price) to compute net salvage value. At the 150/50, 90/50 and 90/40 P reduction scenarios, the cost of demolition and restoration exceeds the value of the land restored so that net salvage value is negative. At the 150/40, 150/30 and 90/30 P reduction scenarios, restored land value exceeds the cost of demolition and restoration and net salvage value is positive. In terms of 50-year present worth, however, salvage value has little significance for the Managed Wetlands technology.

Present Worth

Estimates of 50-year present worth for the Managed Wetlands treatment technology range from about $158 million to $253 million. This equates to ranges of about $46 to $73 per million gallons of water treated and about $73 to $137 per pound of P removed over the 50-year period.

NON-ECONOMIC ANALYSIS

The following section provides a discussion of the non-economic criteria considered in this investigation. These criteria include water quality and other non-economic issues, such as robustness, hydropattern restoration, byproduct generation, permittability, impact to the C&SF project, compliance with the EFA, and compliance with the federal consent decree.

Water Quality

A conceptual level finished water quality characterization was prepared for the Managed Wetlands treatment train. Water quality parameters included nutrients (phosphorus and nitrogen), metals, and others such as alkalinity, total dissolved solids, (TDS) and total organic carbon (TOC). Methyl mercury was specifically included in the water quality evaluation because of its importance as a constituent of concern in South Florida. Data from the chemical literature (Sorg, 1979) and the ENR Project (South Florida Water Management District, 1996) indicate the chemical treatment and wetlands components both have capability to remove methyl mercury.

Effluent water quality characteristics for the Managed Wetlands treatment train were estimated for two levels of influent P (150 and 90 ppb) and several levels of effluent P concentrations in the 30 ppb to 50 ppb range. In the 150 ppb P influent, the concentrations of non-P parameters were assumed to be similar to the 1995 average concentrations in inflow to the ENR Project as summarized in the Everglades Nutrient Removal Project 1995 Monitoring Report (South Florida Water Management District, 1996). In the 90 ppb P influent, the concentrations of non-P parameters were assumed to be similar to the average concentrations measured in grab samples obtained during the period August 1994 through August 1995 at Sampling Station G252C, which is located immediately after the buffer zone in Cell 1 of the ENR (South Florida Water Management District, undated). This assumed composition of 90 ppb P influent is speculative because it is based on grab samples within ENR only and may not be representative of EAA runoff following full implementation of BMPs.

Calculation Procedure. The following calculations were made for the water quality characterization:

1. Concentrations of parameters in the chemical treatment plant effluent (prior to blending) were estimated using the following sequence of calculations:

   A. Soluble and particulate fractions for each parameter were estimated for the raw water, using ENR data, data from Amendment 6 bench tests, or information from general treatment literature. Using P at 150 ppb as an example, with dissolved P being 70 percent of total P, raw water dissolved P is 105 ppb and particulate P is 45 ppb.

   B. FEB effluent concentrations were estimated by allowing no removal of dissolved materials through the FEB and 33 percent removal of particulate material. Continuing with the

above example, FEB effluent dissolved P = 105 ppb, FEB effluent particulate P = (1 - 0.33) 45 = 30 ppb, and FEB effluent P = 135 ppb.

C. A fixed dose of ferric chloride (16 mg/L as Fe) was applied to the treatment plant influent. A fixed lime dose (13 mg/L as CaO) was also applied to control the reaction pH at 7.0. Good results had been obtained at pH 7.0 in Amendment 6 jar tests (Analysis and Development of Chemical Treatment Processes, Contract C-3501, Amendment 6, Technical Memorandum No.1). This dosing regime removed a fraction of dissolved material (the fraction depending on the parameter being considered) and rendered the precipitated and other suspended solids suitable for the solids separation step. Continuing the example, the dosing program precipitated 95 percent of the dissolved P, leaving 5 ppb dissolved P and 130 ppb (135 ppb - 5 ppb) particulate P in the water flowing to the solids separator. Note that dosing also increases the concentrations of some components (chloride and some trace element impurities associated with the chemicals) and that these increases were included in the calculation.

D. The solids separation step was then assumed to remove solids according to its estimated removal efficiency. For example, a solids removal efficiency of 80 percent was used for settling in earthen basins. No credit was taken for removal of dissolved P. For this example, plant effluent P was 31 ppb [(1 - 0.80) 130 + 5].

3. Concentrations of parameters in the chemical treatment train effluent (i.e., after blending treatment plant effluent and bypassed water) were estimated by flow weighting the concentrations of treatment plant effluent and bypassed water. The bypassed water concentration was equal to the FEB effluent concentration. Consider the case in which average treatment plant flow is 109 mgd and average bypassed flow is 80 mgd. Based on the explanations above, plant effluent P is 31 ppb and FEB effluent P is 135 ppb. Therefore the composition of the blended flow is (109 mgd x 31 ppb +80 mgd x 135 ppb)/(109 mgd + 80 mgd) = 75 ppb.

4. Concentrations of P in the wetlands effluent were set at the effluent goal, and the wetlands was then sized to achieve that goal using the Walker equation. Continuing with the example started above, the Walker equation predicts a 6600-acre wetland can reduce P from 75 ppb to 30 ppb. The concentrations of non-P parameters were estimated for the largest wetland by applying the ratio "ENR effluent concentration/ENR influent concentration" (as determined by 1995 ENR operations) to the chemical treatment train effluent concentration, as calculated in Step 3. Using aluminum as another example, applying the ENR concentration ratio described above (0.068) to the estimated chemical treatment train effluent aluminum concentration (140 ppb) gives a wetland effluent aluminum concentration of 9 ppb. Removals of non-P parameters in smaller wetlands (i.e., for the 50 ppb case) were reduced proportionately to wetland area.

Tables 4.2-2 and 4.2-3 show expected composition for Managed Wetlands reducing P to the 30 to 50 ppb range. Generally, the water quality is expected to be similar to the water quality produced by STAs, with marginally higher chloride, calcium, and iron concentrations caused by chemical addition, and somewhat lower levels of trace metals (including mercury), whose removals have been enhanced by chemical

treatment. Mercury removal on the order of 80 percent are predicted, based on the mercury-removal capability of the chemical treatment and wetlands components of Managed Wetlands.

Water Quality Changes Caused by Treatment. Table 4.2-4 compares untreated water composition with composition of final effluent for the scenario involving reduction of P from 150 ppb to 30 ppb. The first column shows the changes in absolute values, with negative numbers signifying concentration decreases and positive numbers signifying concentration increases. The second column shows the ratio of effluent concentration to influent concentration for the various parameters. Such information is generally useful, since it could be applied (with caution) to EAA waters of somewhat different composition than waters feeding the ENR.

The Managed Wetlands treatment system removes small amounts of silica. It removes metals rather well, except for manganese. Addition of ferric chloride causes increased chloride and TDS concentrations, and can increase iron and trace metal concentrations if these chemicals are not effectively precipitated and/or their reaction products are inefficiently separated by the solids separation devices. Calcium is increased by lime addition. Alkalinity and TOC are reduced slightly. Ammonia and nitrates are removed very well.

STAs remove phosphorus to 30 ppb and possibly below. They remove ammonia and nitrate very well, and metals rather well. They affect moderate sulfate removals. ENR Project data suggest that STAs increase manganese, chloride, sodium, and TDS, but these increases are moderate (5 to 18 percent). They increase alkalinity and TOC slightly.

Other Non-Economic Criteria

Robustness. The STA component of the Managed Wetlands treatment train will provide flow equalization capacity during extreme runoff events, more so than the chemical treatment alternatives but less than with the larger stand-alone STAs. During periods of prolonged drought, precaution must be taken to avoid drying out of the STA which could result in the re-release of phosphorus from the sediments. When flows greatly exceed design flows, the P removal capability of the STA may be temporarily impaired. However chemical treatment can be used during these periods to remove more P and maintain, to some degree, the overall efficiency of the treatment train.

Table 4.2-2. Predicted Effluent Water Quality For Managed Wetlands with Influent P = 150 ppb

Parameter	Unit	Influent Concentration[a]	Predicted Effluent Water Quality For Influent/Effluent Levels				
			150/50	150/40	150/30	150/20	150/10
Nutrients:							
Total phosphorus	ug/L	150	50	40	30		
Ammonia nitrogen	ug/L	440	270	180	50		
Total Kjeldahl nitrogen	ug/L	2700	1700	1610	1480		
Nitrate nitrogen	ug/L	450	270	170	40		
Nitrite nitrogen	ug/L	70	40	20	0		
Total nitrogen	ug/L	3220	2020	1810	1520		
Metals:							
Aluminum	ug/L	297	84	53	9		
Copper[b]	ug/L						
Iron	ug/L	358	1192	771	193		
Manganese	ug/L	17	55	61	69		
Mercury (total)	ug/L	2.2E-03	9.6E-04	7.8E-04	5.3E-04		
Mercury (methyl)	ug/L	2.0E-04	1.0E-04	7.7E-05	4.0E-05		
Zinc	ug/L	5	2	1	0		
Ions:							
Sulfate	mg/L	63	60	58	55		
Silica	mg/L	27	25	25	25		
Chloride	mg/L	134	162	168	177		
Calcium	mg/L	75	80	80	80		
Magnesium	mg/L	24	23	24	24		
Sodium	mg/L	90	97	101	107		
Potassium	mg/L	7	7	8	8		
Others:							
Alkalinity as $CaCO_3$	mg/L	241	232	233	235		
pH	s.u.	7	7	7	7		
Specific conductance[b]	umho/cm						
Total dissolved solids	mg/L	659	698	707	721		
Total organic carbon	mg/L	38	31	31	32		

[a] Source: Everglades Nutrient Removal Project 1995 Monitoring Report published by the South Florida Water Management District.
P concentrations are influent/effluent concentrations evaluated in this study

[b] Water quality analysis for this parameter in progress at time of final report production

Table 4.2-3. Predicted Effluent Water Quality For Managed Wetlands with Influent P = 90 ppb

Parameter	Unit	Influent Concentration[a]	Predicted Effluent Water Quality For Influent/Effluent Levels				
			90/50	90/40	90/30	90/20	90/10
Nutrients:							
Total phosphorus	ug/L	90	50	40	30		
Ammonia nitrogen	ug/L	160	120	80	20		
Total Kjeldahl nitrogen	ug/L	2700	1940	1800	1630		
Nitrate nitrogen	ug/L	250	190	110	20		
Nitrite nitrogen	ug/L	70	50	30	0		
Total nitrogen	ug/L	3020	2180	1950	1650		
Metals:							
Aluminum	ug/L	100	77	46	7		
Copper[b]	ug/L						
Iron	ug/L	100	980	605	129		
Manganese	ug/L	12	36	42	49		
Mercury (total)	ug/L	1.8E-03	1.0E-03	7.8E-04	4.9E-04		
Mercury (methyl)	ug/L	1.6E-04	1.0E-04	7.1E-05	3.3E-05		
Zinc	ug/L	3	2	1	0		
Ions:							
Sulfate	mg/L	73	71	68	64		
Silica	mg/L	22	21	21	21		
Chloride	mg/L	183	204	215	229		
Calcium	mg/L	81	85	85	85		
Magnesium	mg/L	26	26	27	27		
Sodium	mg/L	119	125	132	141		
Potassium	mg/L	10	10	11	12		
Others:							
Alkalinity as $CaCO_3$	mg/L	275	269	271	273		
pH	s.u.	7	7	7	7		
Specific conductance[b]	umho/cm						
Total dissolved solids	mg/L	720	746	760	778		
Total organic carbon	mg/L	40	37	38	39		

[a] Source: Unpublished water quality data (except P concentrations) for period August 1994 - August 1995 at sample station G252C, South Florida Water Management District.

[b] Water quality analysis for this parameter in progress at time of final report production

Table 4.2-4. Effect of Managed Wetlands on Water Quality

Parameter	Unit	Concentration change caused by treatment	Ratio of effluent concentration to concentration in EAA raw water
Nutrients:			
Total phosphorus	ug/L	-120	0.200
Ammonia nitrogen	ug/L	-390	0.111
Total Kjeldahl nitrogen	ug/L	-1,217	0.549
Nitrate nitrogen	ug/L	-415	0.078
Nitrite nitrogen	ug/L	-70	0.000
Total nitrogen	ug/L	-1,700	0.472
Metals:			
Aluminum	ug/L	-288	0.030
Copper[a]	ug/L		
Iron	ug/L	-165	0.539
Manganese	ug/L	-52	4.059
Mercury (total)	ug/L	-1.7E-03	0.239
Mercury (methyl)	ug/L	-1.6E-04	0.200
Zinc	ug/L	5	0.000
Ions:			
Sulfate	mg/L	-8	0.873
Silica	mg/L	-2	0.926
Chloride	mg/L	34	1.321
Calcium	mg/L	5	1.067
Magnesium	mg/L	0	1.000
Sodium	mg/L	17	1.189
Potassium	mg/L	1	1.143
Others:			
Alkalinity as $CaCO_3$	mg/L	-6	0.975
pH	s.u.	0	1.000
Specific conductance[a]	umho/cm		
Total dissolved solids	mg/L	62	1.094
Total organic carbon	mg/L	-6	0.842

[a] Water quality analysis for this parameter in progress at time of final report production

Hydropattern Restoration. The retention volume within the STA component of the Managed Wetlands treatment train provides some capability to manage the quantity and timing of discharges to downstream water conservation areas. However, retaining of water in the STA for extended periods (several weeks or longer) would be expected to impair treatment performance.

Byproduct Generation. Since chemicals will be used for this treatment train, byproducts will be generated. The chemicals required for treating the influent water include iron salts for precipitation of phosphorus, lime for pH adjustment, as necessary, and possibly polymer to enhance coagulation, flocculation, and sedimentation. Solids removed from the chemical treatment component will require thickening and subsequent disposal in a dedicated land disposal site. Because chemical treatment is used to remove only a fraction of the phosphorus, sludge production is somewhat reduced compared to chemical treatment only alternatives.

Permittability. Both the EFA and the Federal Consent Decree include specific language requiring STAs. Since this treatment train includes an STA, its ability to be permitted is better than treatment trains that do not include STAs. There are reasonable assurances that this treatment train has the ability to meet the Class III water quality criteria. However, it is unlikely that the treatment train can satisfy the final effluent P standard unless it is set at 30 ppb or above. Additionally there may be perception problems (because of the chemical treatment component) which might affect the ability of this treatment train to pass the "public interest test" required to obtain federal approvals. The treatment plant may be perceived as having a negative impact on the natural surroundings.

Impact on the C&SF Project. With respect to water supply, there is a potential for the STA component to have an adverse impact on the C&SF Project. This is due to the possibility of having to add water to the STA during dry periods to avoid re-release of phosphorus from the sediments. In this case, the STA would be a net user of water and have an adverse impact on water supply. Due to their size and capacity, however, the ability of the STAs to attenuate peak flow rates and to store water for later release could improve current conditions within the C&SF Project.

Compliance with the EFA. Since the EFA includes direct language regarding STAs, and an STA is included in this treatment train, it would most likely satisfy the policy on requirements of the EFA. The total implementation time for the construction of this treatment train can meet the schedule set by the EFA. However, this treatment train, as currently configured, does not have ability to achieve the Phase II default threshold P concentration of 10 ppb.

Compliance with the Federal Consent Decree. Since this treatment train includes an STA, it would most likely satisfy the policy requirements of the Federal Consent Decree.

RESEARCH PRIORITIES

Research priorities for the Managed Wetlands treatment train are essentially the same as those for STAs and chemical treatment as stand-alone treatment technologies. Specific research activities should include the following:

1. Refinement of relationships between P removal and loading rate, operating water depth, and detention time in the STA.

2. Testing of STAs on chemically treated waters with varying influent P concentrations and water quality characteristics to confirm the ability of the follow-on wetland to produce effluent similar to stand-alone STAs. Such a testing program could be accomplished in conjunction with the planned testing program for direct filtration and would yield valuable data toward future resolution of the "marsh-ready" issue.

3. Studies to determine solids settling rates and to confirm overall P removal performance for the chemical treatment component. Such studies would need to be accomplished in basins or tanks specifically designed to simulate settling performance in large earthen basins constructed on muck soils in the EAA.

4.3 CHEMICAL TREATMENT/DIRECT FILTRATION

SECTION 4.3

CHEMICAL TREATMENT/DIRECT FILTRATION

DESCRIPTION

Chemical treatment/direct filtration employs metal salts such as aluminum sulfate, ferric chloride, or ferric sulfate to precipitate dissolved phosphorus. These chemicals also coagulate the precipitates and other solids, which allow these small particulates to be subsequently coalesced (flocculated) into larger and more readily-filtered agglomerates. The precipitation and coagulation reactions are pH dependent; that is, they are most effective within prescribed pH ranges. Therefore, acids or bases are often added concurrently with the metal salts to adjust the pH to the desired range. Additionally, organic polymers are frequently used to increase floc size, density, and strength. Solids are separated from the liquid directly by multimedia filters with no intervening solids separation process such as sedimentation or flotation.

A schematic of the treatment train is illustrated in Figure 4.3. The treatment train includes flow equalization, chemical addition, rapid mixing, flocculation, and downflow filtration. Flow in excess of plant design capacity is routed around the plant and blended with the treated effluent. The plant is sized so that the blended effluent satisfies the treatment goals. Filters consist of coarse activated carbon overlaying anthracite coal, which overlays fine sand. Spent backwash is routed to settling ponds, which also serve as sludge thickening basins. Pond supernatant is returned to the head of the plant. Solids are dredged from the settling ponds during dry periods and applied on dedicated land.

BASIS OF EVALUATION

To size the treatment train, a mass/flow balance model, similar to the one developed for the Amendment 6 work (Contract C-3051) in 1993, was used to size flow equalization basins and determine the necessary capacity of treatment units. Influent P was either 150 ppb or 90 ppb. It was assumed that direct filtration is capable of achieving plant effluent P concentrations of 5 to 10 ppb. Experience at the Wahnbach Reservoir plant in Germany (capacity 113 mgd) appears to verify this assumption.

For chemical treatment technologies, it is not always necessary to treat all of the influent flow to satisfy the effluent P objective. To do so would require a very large and expensive plant sized to treat peak flows. A less expensive option involves use of a smaller plant that treats only a portion of the flow during high-flow periods. When flow is below plant capacity, as it would be during dry weather, all of the flow is treated to P levels below the effluent goal. During peak flows, flow above plant capacity is routed around the plant. The bypassed flow and treated flow are then

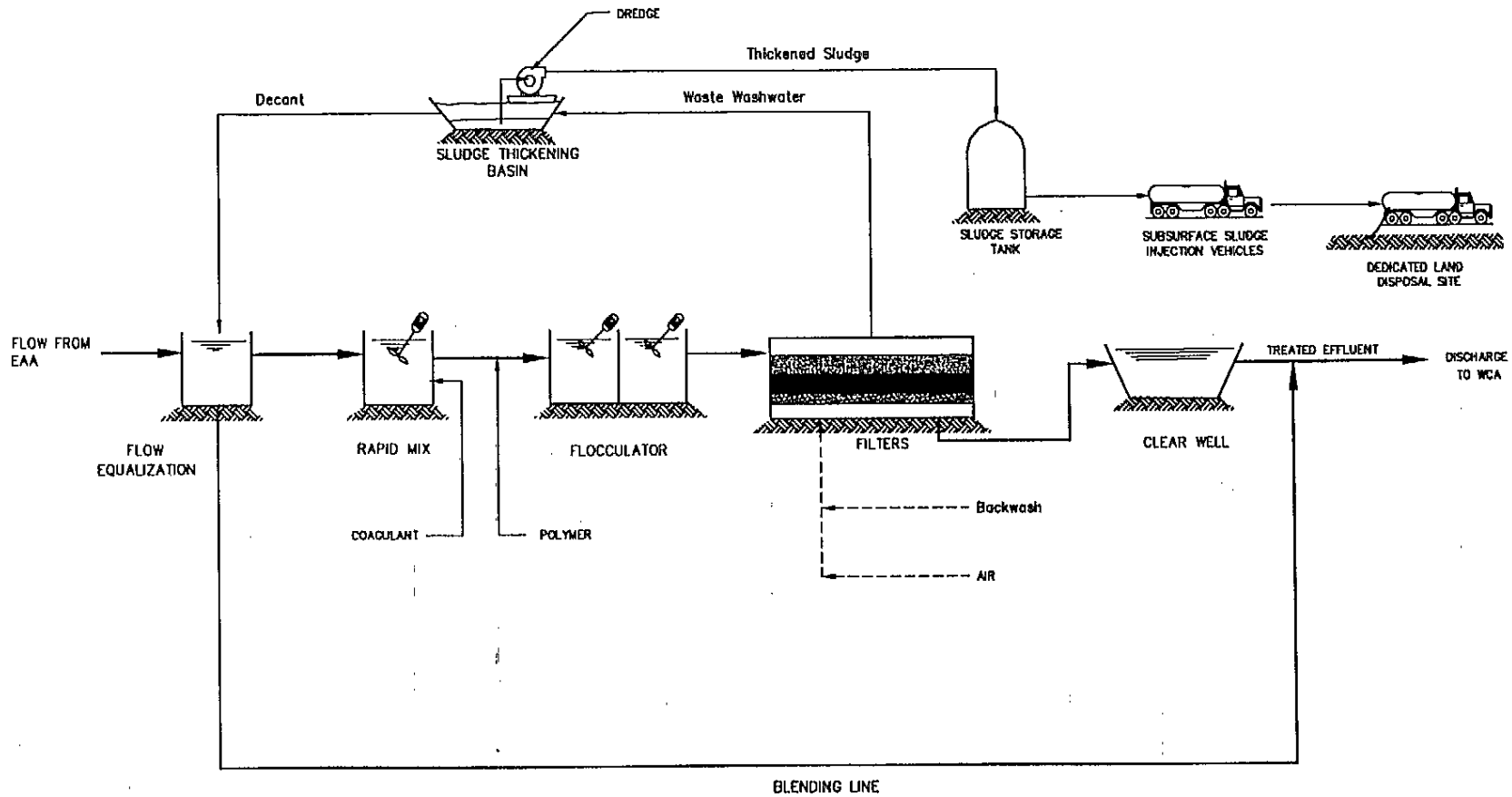

PEER/Brown and Caldwell
Consultants

FIGURE. 4.3
DIRECT FILTRATION FLOWSHEET

blended at the back end of the plant and discharged. During peak flows, P levels in the blended stream are likely to exceed effluent goals. However, the low-P concentrations achieved during low-flow periods offset the higher-P concentrations discharged during high-flow periods and the long-term average effluent P concentration satisfies the treatment goal. Use of flow equalization also results in lower overall project costs by dampening out peak influent flows, and reducing the required design capacity of the treatment works.

The mass/flow balance model discussed in Chapter 3, Methodology, was used to estimate the optimum relationship between blending, flow equalization basin volume, and treatment plant design capacity, using minimum present worth cost as the selection criterion. Table 4.3-1 summarizes design data for the Chemical Treatment/Direct Filtration treatment train resulting from this optimization process.

The Wahnbach plant uses an iron dose of 1.1 to 2.7 mg/L. However, EAA waters have a substantial coagulant demand due to their high organic carbon concentrations. Work done under another contract for the District suggested that an iron dose of about 16 mg/L worked best with EAA waters. This iron dose, and a dose of 13 mg/L lime (as CaO) for pH control, were assumed for this evaluation. Pilot scale studies will determine the optimum chemical requirements needed for P removal.

Rapid mixers and flocculators were sized to provide detention times of 3 seconds and 8 minutes, respectively, when the treatment plant is operated at full capacity. The filter units were sized for flow rates of 5 gpm/sq ft when the plant is operating at full capacity. This corresponds to the maximum filtering rate at the Wahnbach reservoir facility. Sludge thickening ponds were sized to accommodate 6 months of 7 percent sludge to an average depth of 4 feet. Dedicated land disposal sites were sized so that nearly all water in the applied sludge could be removed by evaporation during the dry season.

ECONOMIC ANALYSIS

Economic analysis of the treatment trains involved sizing of individual process units and preparing estimates of capital costs, O&M costs, and 50-year present worth. The following paragraphs summarize the results of the cost analysis. Table 4.3-1 provides a cost summary for the Direct Filtration treatment train of the various P removal scenarios.

Capital Costs

Capital cost estimates were generated for ten scenarios involving two levels of influent P and five levels of effluent P. They ranged from about $81 million to about $191 million.

Table 4.3-1. Basis of Design and Cost Information for Chemical Treatment/Direct Filtration

Parameter	Influent/Effluent P Levels									
	150/50	150/40	150/30	150/20	150/10	90/50	90/40	90/30	90/20	90/10
Basis of Design										
Influent PS capacity, mgd	2330	2330	2330	2330	2330	2330	2330	2330	2330	2330
Influent PS average flow, mgd	189	189	189	189	189	189	189	189	189	189
STA area, acres	0	0	0	0	0	0	0	0	0	0
FEB area, acres	500	500	1000	1500	2500	200	300	500	800	1500
Treatment plant influent PS capacity, mgd	251	327	360	448	710	127	187	263	370	615
Treatment plant influent PS average flow, mgd	128	143	158	173	189	79	105	130	156	182
Treatment plant land area, acres	27	30	33	36	40	17	22	27	33	38
Sludge disposal area, acres	269	300	332	363	397	166	221	273	328	382
Effluent PS capacity, mgd	2330	2330	2330	2330	2330	2330	2330	2330	2330	2330
Effluent PS average flow, mgd	189	189	189	189	189	189	189	189	189	189
Total land area, acres	875	913	1,501	2,090	3,230	421	597	880	1,276	2,112
Capital Costs, $ million										
Influent pumping station	17.87	17.87	17.87	17.87	17.87	17.87	17.87	17.87	17.87	17.87
STA	0.00	0.00	0.00	0.00	0.00	0.00	0.00	0.00	0.00	0.00
STA seepage pump station	0.00	0.00	0.00	0.00	0.00	0.00	0.00	0.00	0.00	0.00
FEB	4.13	4.13	8.25	12.38	20.63	1.65	2.48	4.13	6.60	12.38
FEB seepage pump station	0.11	0.11	0.21	0.32	0.53	0.04	0.06	0.11	0.17	0.32
Treatment plant influent pump station	2.41	3.14	3.45	4.30	6.81	1.22	1.79	2.52	3.55	5.90
Treatment plant	27.45	33.34	35.90	42.72	63.03	17.84	22.49	28.38	36.68	55.66
Sludge treatment and disposal	2.56	2.86	3.16	3.46	3.78	1.58	2.10	2.60	3.12	3.64
Effluent pump station	17.87	17.87	17.87	17.87	17.87	17.87	17.87	17.87	17.87	17.87
Subtotal	72.39	79.31	86.72	98.91	130.51	58.07	64.67	73.48	85.85	113.63
Construction contingencies (20 percent)	14.48	15.86	17.34	19.78	26.10	11.61	12.93	14.70	17.17	22.73
Subtotal, construction costs	86.87	95.17	104.06	118.69	156.61	69.69	77.60	88.17	103.03	136.36
Engineering (15 percent)	13.03	14.28	15.61	17.80	23.49	10.45	11.64	13.23	15.45	20.45
Land purchase - STA	0.00	0.00	0.00	0.00	0.00	0.00	0.00	0.00	0.00	0.00
Land purchase - FEB	1.93	1.93	3.85	5.78	9.63	0.77	1.16	1.93	3.08	5.78
Land purchase - treatment plant	0.10	0.12	0.13	0.14	0.15	0.06	0.08	0.11	0.13	0.15
Land purchase - sludge disposal	1.03	1.16	1.28	1.40	1.53	0.64	0.85	1.05	1.26	1.47
Total Capital Cost	102.97	112.65	124.92	143.81	191.41	81.62	91.33	104.48	122.95	164.21
Present Worth - Capital Cost	102.97	112.65	124.92	143.81	191.41	81.62	91.33	104.48	122.95	164.21
O&M Costs, $ million/yr										
Influent pumping station	0.52	0.52	0.52	0.52	0.52	0.52	0.52	0.52	0.52	0.52
STA	0.00	0.00	0.00	0.00	0.00	0.00	0.00	0.00	0.00	0.00
STA seepage pump station	0.00	0.00	0.00	0.00	0.00	0.00	0.00	0.00	0.00	0.00
STA sampling and monitoring	0.00	0.00	0.00	0.00	0.00	0.00	0.00	0.00	0.00	0.00
FEB	0.03	0.03	0.06	0.09	0.15	0.01	0.02	0.03	0.05	0.09
FEB seepage pump station	0.02	0.02	0.03	0.05	0.07	0.01	0.02	0.02	0.03	0.05
Treatment plant influent pump station	0.39	0.40	0.42	0.44	0.47	0.31	0.35	0.38	0.42	0.46
Chemicals	2.23	2.49	2.75	3.01	3.29	1.37	1.83	2.26	2.71	3.17
Sludge treatment and disposal	0.15	0.17	0.18	0.20	0.22	0.09	0.12	0.15	0.18	0.21
Other treatment plant O&M	0.79	0.87	0.95	1.03	1.11	0.52	0.66	0.80	0.94	1.08
Treatment plant sampling and monitoring	0.30	0.30	0.30	0.30	0.30	0.30	0.30	0.30	0.30	0.30
Effluent pump station	0.52	0.52	0.52	0.52	0.52	0.52	0.52	0.52	0.52	0.52
Total Annual O&M Cost	4.94	5.32	5.74	6.16	6.65	3.67	4.34	4.99	5.67	6.39
Present Worth - Annual O&M Cost	106.11	114.26	123.32	132.37	142.87	78.93	93.24	107.20	121.87	137.27
Present Worth - Replacement Costs, $million										
Influent pump station	1.68	1.68	1.68	1.68	1.68	1.68	1.68	1.68	1.68	1.68
STA seepage pump station	0.00	0.00	0.00	0.00	0.00	0.00	0.00	0.00	0.00	0.00
FEB seepage pump station	0.02	0.02	0.04	0.06	0.10	0.01	0.01	0.02	0.03	0.06
Treatment plant influent pump station	0.45	0.59	0.65	0.81	1.28	0.23	0.34	0.47	0.67	1.11
Chemical feed system	0.40	0.49	0.53	0.63	0.92	0.26	0.33	0.42	0.54	0.81
Other major treatment plant equipment	4.56	5.54	5.97	7.10	10.47	2.96	3.74	4.72	6.09	9.25
Sludge treatment and disposal	0.43	0.48	0.53	0.57	0.63	0.26	0.35	0.43	0.52	0.60
Effluent pump station	1.68	1.68	1.68	1.68	1.68	1.68	1.68	1.68	1.68	1.68
Total Present Worth - Replacement Costs	9.21	10.46	11.06	12.52	16.75	7.08	8.12	9.41	11.20	15.19
Salvage Value, $ million										
Influent pump station demolition cost	(3.57)	(3.57)	(3.57)	(3.57)	(3.57)	(3.57)	(3.57)	(3.57)	(3.57)	(3.57)
STA seepage pump station demolition cost	0.00	0.00	0.00	0.00	0.00	0.00	0.00	0.00	0.00	0.00
FEB seepage pump station demolition cost	(0.02)	(0.02)	(0.04)	(0.06)	(0.11)	(0.01)	(0.01)	(0.02)	(0.03)	(0.06)
Treatment plant influent pump station demolition cost	(0.48)	(0.63)	(0.69)	(0.86)	(1.36)	(0.24)	(0.36)	(0.50)	(0.71)	(1.18)
Treatment plant demolition cost	(5.49)	(6.67)	(7.18)	(8.54)	(12.61)	(3.57)	(4.50)	(5.68)	(7.34)	(11.13)
Effluent pump station demolition cost	(3.57)	(3.57)	(3.57)	(3.57)	(3.57)	(3.57)	(3.57)	(3.57)	(3.57)	(3.57)
STA restoration cost	0.00	0.00	0.00	0.00	0.00	0.00	0.00	0.00	0.00	0.00
FEB restoration cost	(1.41)	(1.41)	(2.00)	(2.45)	(3.16)	(0.89)	(1.10)	(1.41)	(1.79)	(2.45)
Sludge land restoration cost	0.00	0.00	0.00	0.00	0.00	0.00	0.00	0.00	0.00	0.00
STA land value	0.00	0.00	0.00	0.00	0.00	0.00	0.00	0.00	0.00	0.00
FEB land value	1.93	1.93	3.85	5.78	9.63	0.77	1.16	1.93	3.08	5.78
Treatment plant land value	0.10	0.12	0.13	0.14	0.15	0.06	0.08	0.11	0.13	0.15
Sludge land value	0.00	0.00	0.00	0.00	0.00	0.00	0.00	0.00	0.00	0.00
Net Salvage Value	(12.53)	(13.84)	(13.08)	(13.15)	(14.61)	(11.03)	(11.87)	(12.73)	(13.81)	(16.05)
Present Worth - Salvage Value	(1.76)	(1.95)	(1.84)	(1.85)	(2.06)	(1.55)	(1.67)	(1.79)	(1.94)	(2.26)
50 - Year Present Worth, $ million										
Capital Cost	102.97	112.65	124.92	143.81	191.41	81.62	91.33	104.48	122.95	164.21
O&M Cost	106.11	114.26	123.32	132.37	142.87	78.93	93.24	107.20	121.87	137.27
Replacement Cost	9.21	10.46	11.06	12.52	16.75	7.08	8.12	9.41	11.20	15.19
Salvage Value	1.76	1.95	1.84	1.85	2.06	1.55	1.67	1.79	1.94	2.26
Total	220.05	239.32	261.14	290.55	353.08	169.17	194.36	222.88	257.96	318.92
Present worth, $/million gallons treated	63.80	69.38	75.71	84.24	102.37	49.05	56.35	64.62	74.79	92.46
Present worth, $/pound P removed	76.49	75.63	75.65	77.69	87.67	147.02	135.13	129.13	128.10	138.58

O&M Costs

O&M cost estimates were generated for ten scenarios involving two levels of influent P and five levels of effluent P. They ranged from about $3.7 million to about $6.7 million annually. Present worth values for the O&M costs ranged from about $79 million to about $143 million.

Replacement Costs

Present worth replacement cost estimates were generated for the ten scenarios involving two levels of influent P and five levels of effluent P. They ranged from about $7.1 million to about $16.8 million.

Salvage Value

Salvage values were calculated by subtracting the cost to restore the land from the value of the land. The costs to restore the land included costs to demolish the influent, seepage, and effluent pumping stations; the cost to demolish the treatment plant; and the costs associated with restoration of the land. In all cases, demolition and land restoration costs exceeded land value at the end of 50 years. The net salvage cost ranged from about $11.0 million to about $16 million. The present worth value of the net salvage cost ranged from about $1.5 million to about $2.3 million.

Present Worth

Estimates of total 50-year present worth for the chemical treatment/direct filtration treatment train range from about $169 million to about $353 million. This equates to ranges of about $49 to $102 per million gallons of water treated and about $75 to $147 per pound of P removed over the 50-year period.

NON-ECONOMIC ANALYSIS

The following section discusses the analysis that was conducted for the non-economic criteria. These criteria included water quality and other non-economic issues, such as robustness, hydropattern restoration, byproduct generation, permittability, impact to the C&SF project, compliance with the EFA, and compliance with the federal consent decree.

Water Quality

A conceptual level finished water quality characterization for the chemical treatment/direct filtration treatment train was accomplished as part of this investigation. Water quality parameters included nutrients (phosphorus and nitrogen), metals, and other constituents such as alkalinity, total dissolved solids, (TDS) and total organic carbon (TOC). The evaluation was performed for these parameters for each treatment train for two levels of influent quality (150 ppb and 90 ppb P) and various levels of effluent quality, as characterized by P concentration. Influent composition is described below:

1. Influent P = 150 ppb. The concentrations of other parameters were assumed to be similar to the 1995 average concentrations in inflow to the ENR Project as summarized in the Everglades Nutrient Removal Project 1995 Monitoring Report (South Florida Water Management District, 1996). Influent P was defined as 150 ppb to maintain consistency with other work presented in this report. This represents a variance of less than 10% over measured influent P data.

2. Influent P = 90 ppb. The concentrations of other parameters mirrored the average concentrations measured in the August 1994-August 1995 grab samples at Sampling Station G252C, which is located immediately after the buffer zone in Cell 1 of the ENR (South Florida Water Management District, undated). This assumed composition of 90 ppb P influent is speculative because it is based on grab samples within ENR only and may not be representative of EAA runoff following full implementation of BMPs.

Effluent concentrations were calculated for all parameters for systems designed to reduce P to the range of 10 to 50 ppb.

Calculation Procedure. Concentrations of parameters in the chemical treatment/direct filtration plant effluent (prior to blending) were estimated using the following sequence of calculations:

A. Soluble and particulate fractions for each parameter were estimated for the raw water, using ENR Project data, data from previous bench scale work done for the District (Amendment 6 bench tests) and information from the general treatment literature. Using total P at 150 ppb, for example, with dissolved phosphorus being 70 percent of total P, raw water dissolved P was 105 ppb and paticulate P was 45 ppb.

B. FEB effluent concentrations were estimated by assuming no removal of dissolved materials through the FEB and 33 percent removal of particulate material. Thus, continuing with the example, FEB effluent dissolved phosphorus was 105 ppb, FEB effluent particulate phosphorus was [(1 - 0.33) 45], and FEB effluent phosphorus was 135 ppb.

C. A fixed dose of ferric chloride (16 mg/L as Fe) was applied to the treatment plant influent. A fixed lime dose (13 mg/L as CaO) was also applied to control the reaction pH at 7.0. Good

results had been obtained at pH 7.0 in Amendment 6 jar tests (Analysis and Development of Chemical Treatment Processes, Contract C-3501, Amendment 6, Technical Memorandum No.1). This dosing regime was assumed to remove a fraction of dissolved material (the fraction depending on the parameter being considered) and to render the precipitated and other suspended solids suitable for the solids separation step. The chemical dosing program was assumed to precipitate 95 percent of the dissolved phosphorus, leaving 5 ppb dissolved phosphorus and 130 ppb (135 ppb - 5 ppb) particulate phosphorus in the water flowing to the solids separator. Note that dosing also increased the concentrations of some components (chloride and some trace elements impurities associated with the chemicals) and that these increases were included in the calculation.

D. The solids separation step then removed solids according to its documented capability. Conservative removal efficiencies were assumed. For example, a solids removal efficiency of 97 percent was used for the filters. No dissolved P was removed by the filters. For this example, filter plant effluent P was 9 ppb [(1-0.99)130 +5]. It should be noted that filter plant effluent P for the 90 ppb influent P case was estimated to be 7 ppb using a similar set of calculations.

Concentrations of parameters in the treatment train effluent (i. e., after blending treatment plant effluent and bypassed water) were estimated by flow weighting the concentrations of treatment plant effluent and bypassed water. The bypassed water concentration was equal to the FEB effluent concentration. Consider the case in which average treatment plant flow was 143 mgd and average bypassed flow was 46 mgd. Based on the explanations above, plant effluent P was 9 ppb and FEB effluent P was 135 ppb. Therefore, the composition of the blended flow was 40 ppb [(143*9+46*135)/(143+46)].

Tables 4.3-2 and 4.3-3 show predicted composition of blended effluent for the cases where influent P is 150 and 90 ppb, respectively and effluent P varies over the range of 10 to 50 ppb.

General Effects of Chemical Treatment/Direct Filtration on Plant Effluent Water Quality. Table 4.3.4 shows changes in water quality caused by chemical treatment/direct filtration. It compares untreated water composition with composition of effluent from the treatment plant for the scenario involving a 150 ppb P concentration in the raw (untreated) water and a treated effluent of 9 ppb. These changes are based on effluent composition prior to blending. It shows the changes in terms of (1) concentration differences (negative numbers signify concentration decreases and positive numbers signify concentration increases) and (2) the ratio of effluent concentration to influent concentration. Such information is generally useful, since it can be applied (with caution) to EAA waters of somewhat different composition than waters feeding the ENR Project.

Table 4.3.4 shows that chemical treatment/direct filtration can remove high percentages of P, and also reduce TOC significantly, about 40 percent. It can remove moderate amounts of silica (20 percent) while removing metals rather well, except for iron and manganese. Total mercury and methyl mercury removals are about 80 and 40 percent, respectively. Addition of ferric chloride causes increased chloride and TDS concentrations (23 and 6 percent, respectively). Calcium is increased by lime addition. Chemical treatment reduces alkalinity slightly (about 10 percent) because more alkalinity is consumed by the hydrolysis of the iron reagent than is supplied by the pH control agent. Experience indicates that chemical systems will have high removals of turbidity and suspended solids.

Table 4.3-2. Predicted Effluent Water Quality For Chemical Treatment/Direct Filtration with Influent P = 150 ppb

Parameter	Unit	Influent Concentration[a]	Predicted Effluent Water Quality For Influent/Effluent Levels				
			150/50	150/40	150/30	150/20	150/10
Nutrients:							
Total phosphorus	ug/L	150	50	40	30	20	9
Ammonia nitrogen	ug/L	44	440	440	440	440	440
Total Kjeldahl nitrogen	ug/L	2700	1490	1362	1234	1106	970
Nitrate nitrogen	ug/L	450	450	450	450	450	450
Nitrite nitrogen	ug/L	70	70	70	70	70	70
Total nitrogen	ug/L	3220	2010	1882	1754	1626	1490
Metals:							
Aluminum	ug/L	297	98	85	71	57	42
Copper[b]	ug/L						
Iron	ug/L	358	485	509	533	557	582
Manganese	ug/L	17	52	56	61	65	70
Mercury (total)	ug/L	2.2E-03	9.6.E-04	8.5.E-04	7.4.E-04	6.3.E-04	5.2.E-04
Mercury (methyl)	ug/L	2.0E-04	1.4.E-04	1.3.E-04	1.3.E-04	1.2.E-04	1.2.E-04
Zinc	ug/L	5	4	3	3	3	3
Ions:							
Sulfate	mg/L	64	63	63	63	63	63
Silica	mg/L	27	24	23	23	22	22
Chloride	mg/L	134	155	157	160	162	165
Calcium	mg/L	75	81	82	83	83	84
Magnesium	mg/L	24	23	23	23	23	23
Sodium	mg/L	90	90	90	90	90	90
Potassium	mg/L	7	7	7	7	7	7
Others:							
Alkalinity as $CaCO_3$	mg/L	241	227	226	224	223	221
pH	s.u.	7	7	7	7	7	7
Specific conductance[b]	umho/cm						
Total dissolved solids	mg/L	659	686	689	692	696	699
Total organic carbon	mg/L	38	27	25	24	23	22

[a] Source: Everglades Nutrient Removal Project 1995 Monitoring Report published by the South Florida Water Management District.
P concentrations are influent/effluent concentrations evaluated in this study

[b] Water quality analysis for this parameter in progress at time of final report production

Table 4.3-3. Predicted Effluent Water Quality For Chemical Treatment/Direct Filtration with Influent P = 90 ppb

Parameter	Unit	Influent Concentration[a]	Predicted Effluent Water Quality For Influent/Effluent Levels				
			90/50	90/40	90/30	90/20	90/10
Nutrients:							
Total phosphorus	ug/L	90	50	40	30	20	10
Ammonia nitrogen	ug/L	160	160	160	160	160	160
Total Kjeldahl nitrogen	ug/L	2700	1873	1650	1436	1213	990
Nitrate nitrogen	ug/L	250	250	250	250	250	250
Nitrite nitrogen	ug/L	70	70	70	70	70	70
Total nitrogen	ug/L	3020	2193	1970	1756	1533	1310
Metals:							
Aluminum	ug/L	100	65	53	42	31	19
Copper[b]	ug/L						
Iron	ug/L	100	287	355	421	489	558
Manganese	ug/L	12	34	42	50	58	66
Mercury (total)	ug/L	1.8E-03	1.1E-03	9.1E-04	7.6E-04	6.1E-04	4.5E-04
Mercury (methyl)	ug/L	1.6E-04	1.2E-04	1.1E-04	1.1E-04	1.0E-04	9.3E-05
Zinc	ug/L	3	3	2	2	2	2
Ions:							
Sulfate	mg/L	73	73	73	73	73	73
Silica	mg/L	22	20	20	19	18	18
Chloride	mg/L	183	196	200	204	208	212
Calcium	mg/L	81	85	86	87	89	90
Magnesium	mg/L	26	26	26	26	26	26
Sodium	mg/L	119	119	119	119	119	119
Potassium	mg/L	10	10	10	10	10	10
Others:							
Alkalinity as $CaCO_3$	mg/L	275	267	264	261	258	256
pH	s.u.	7	7	7	7	7	7
Specific conductance[b]	umho/cm						
Total dissolved solids	mg/L	720	737	742	747	753	758
Total organic carbon	mg/L	40	35	34	32	30	29

[a] Source: Unpublished water quality data (except P concentrations) for period August 1994 - August 1995 at sample station G252C, South Florida Water Management District.

[b] Water quality analysis for this parameter in progress at time of final report production

Table 4.3-4. Effect of Chemical Treatment/Direct Filtration on Water Quality

Parameter	Unit	Concentration change caused by treatment	Ratio of effluent concentration to concentration in EAA raw water
Nutrients:			
Total phosphorus	ug/L	-141	0.060
Ammonia nitrogen	ug/L	0	1.000
Total Kjeldahl nitrogen	ug/L	-1,733	0.359
Nitrate nitrogen	ug/L	0	1.000
Nitrite nitrogen	ug/L	0	1.000
Total nitrogen	ug/L	-1,733	0.463
Metals:			
Aluminum	ug/L	255	0.141
Copper[a]	ug/L		
Iron	ug/L	224	1.626
Manganese	ug/L	53	4.102
Mercury (total)	ug/L	-1.7E-03	0.234
Mercury (methyl)	ug/L	-8.1E-05	0.594
Zinc	ug/L	2	0.555
Ions:			
Sulfate	mg/L	0	1.000
Silica	mg/L	-5	0.815
Chloride	mg/L	31	1.231
Calcium	mg/L	9	1.120
Magnesium	mg/L	0	1.000
Sodium	mg/L	0	1.000
Potassium	mg/L	0	1.000
Others:			
Alkalinity as $CaCO_3$	mg/L	-20	0.917
pH	s.u.	-0.29	0.960
Specific conductance[a]	umho/cm		
Total dissolved solids	mg/L	40	1.061
Total organic carbon	mg/L	-16	0.579

[a] Water quality analysis for this parameter in progress at time of final report production

Chemical addition can increase trace metal concentrations if the reagents contain significant amounts of metals, if they are not effectively precipitated, and/or their chemical reaction products are inefficiently removed by the solids separation devices.

Other Non-Economic Criteria

Robustness. Direct filtration is capable of responding to wide variations in flow and influent characteristics while still achieving P removal objectives. Phosphorus reductions to between 50 and 10 ppb could be achieved by varying operating parameters such as chemical feed rate, ratios of treated and untreated flows, and number of treatment units in service. Chemical feed rates could be paced to coincide with changes in plant inflow, and phosphorus and total organic carbon concentrations. Additional flexibility in handling flow variations was provided by FEBs located at the headworks. The FEBs serve to dampen peak flows.

Hydropattern Restoration. Without a significant retention or storage area associated with this treatment train there will be limited flexibility in controlling the effluent discharges to the water conservation areas, thus impacting the hydropattern of the Everglades. The FEBs can reduce this impact, but the limited size of the FEB may not reduce this impact significantly.

Byproduct Generation. Chemicals required include iron for precipitation of phosphorus, lime for pH adjustment, as necessary, and possibly polymer to enhance coagulation, flocculation, and filtration. Solids generated by the treatment processes will require thickening and subsequent disposal in a dedicated land disposal site.

Permittability. Both the EFA and the Federal Consent Decree include language regarding STAs. Therefore, the permittability of any treatment train that does not include an STA could be in jeopardy based on legal issues. There are reasonable assurances, however, that this treatment train will meet the current effluent P requirements, the water quality objectives established by the EFA and the Federal Consent Decree, and the future threshold effluent P of 10 ppb. This treatment train might not pass the "public interest test" required to obtain federal approvals due to the perception by the public that a chemical treatment facility would have a negative impact on the natural surroundings and the intent of the EFA.

Impact on the C&SF Project. With respect to water supply, direct filtration would have little effect on the C&SF Project. The FEB at the beginning of the treatment train provides some storage capacity to attenuate peak flow rates and to store water for later release. The FEBs, however, are relatively small and they would have little effect on the C&SF Project.

Compliance with the EFA. While the EFA specifically includes language regarding STAs, and a STA is not part of this treatment train, direct filtration does meet the intent of the policy requirements of the EFA. The treatment train can achieve an effluent concentration of better than 10 ppb for P. The train should achieve the restoration goals of the ECP.

Compliance with Federal Consent Decree. Direct Filtration does not meet the requirements of the Federal Consent Decree in policy issues because the policy is based upon STAs. Direct filtration, however, could improve upon the phosphorus and Class III water quality limits set by this decree.

RESEARCH PRIORITIES

This investigation has identified research areas that should be undertaken prior to implementation of full-scale systems. Some of these areas are:

1. Filter media designs that provide good solids capture and long filter runs in anticipation of the high solids loadings expected to occur as the result of treating EAA waters need to be defined, developed and tested.

2. The effectiveness of solids separation devices (e.g., sedimentation or flotation) that can be installed upstream of the filters to reduce the filter loadings need to be identified and evaluated. Such devices will be needed if filters alone cannot handle high solids loading.

3. Variables influencing P removal in simulated FEBs need to be identified and evaluated. Some of these variables are flow rate, water depth, and detention time.

4. Appropriate chemical dosages for direct filtration need to be defined and tested. General experience indicates that chemical doses needed for good performance in pilot-scale and full-scale direct filters may be less than chemical doses needed in bench-scale tests.

5. In addition to the above, the effects of variables that affect filter solids capture and run length should be evaluated. Some of the variables are filtering rate, filter aids, media-cleaning techniques, and influent solids concentration.

4.4 STA - CHEMICAL TREATMENT/ DIRECT FILTRATION

SECTION 4.4

STORMWATER TREATMENT AREA AND CHEMICAL TREATMENT/DIRECT FILTRATION

DESCRIPTION

This treatment train couples biological treatment in a stormwater treatment area (STA) with chemical treatment/direct filtration. Figure 4.4 is a schematic drawing of this treatment train.

STAs are large, man-made wetland areas which, for the purposes of this evaluation, have been defined as wetlands constructed on muck soils where emergent vegetation dominates. STAs are designed to remove nutrients from stormwater by retaining the water and exposing it to a set of naturally occurring biological, chemical, and physical processes. In this evaluation, wetland vegetation is assumed to grow naturally over time. Phosphorus is taken up by the vegetation and transferred to the muck soil when the vegetation dies and accumulates there.

The direct filtration process consists of a physical/chemical process incorporating chemical addition, rapid mixing, flocculation, and downflow filtration. Filters consist of coarse activated carbon overlying anthracite coal overlying fine sand. Spent backwash is routed to settling ponds. Pond supernatant is returned to the head of the plant. Solids are removed from the settling ponds during dry periods by dredges and applied on dedicated land. Detailed descriptions of STAs and chemical treatment/direct filtration are presented in Sections 4.1 and 4.3 of this report.

BASIS OF EVALUATION

In the evaluation of this treatment train, the STA was sized to achieve an effluent P concentration of 50 ppb P. A set of model equations presented in an August 1995 paper authored by Dr. William J. Walker, Jr., entitled "Design Basis for Everglades Stormwater Treatment Areas", were used to estimate the STA area needed to attain 50 ppb P.

Treatment plant capacity was estimated by a mass/flow balance model developed for this project. Rapid mixers and flocculators provide detention times of 3 seconds and 8 minutes, respectively, when the treatment plant is operating at full capacity. The filter units are sized for flow rates of 5 gpm/sq ft when the treatment plant is operating at full capacity. Sludge thickening ponds are sized to accumulate 6 months of 7 percent sludge to an average depth of 4 feet. Dedicated land disposal sites are sized so that nearly all water in the applied sludge could be removed by evaporation during the dry season. The basis of design section of Table 4.4-1 presents the STA sizes and treatment plant capacities used in this evaluation.

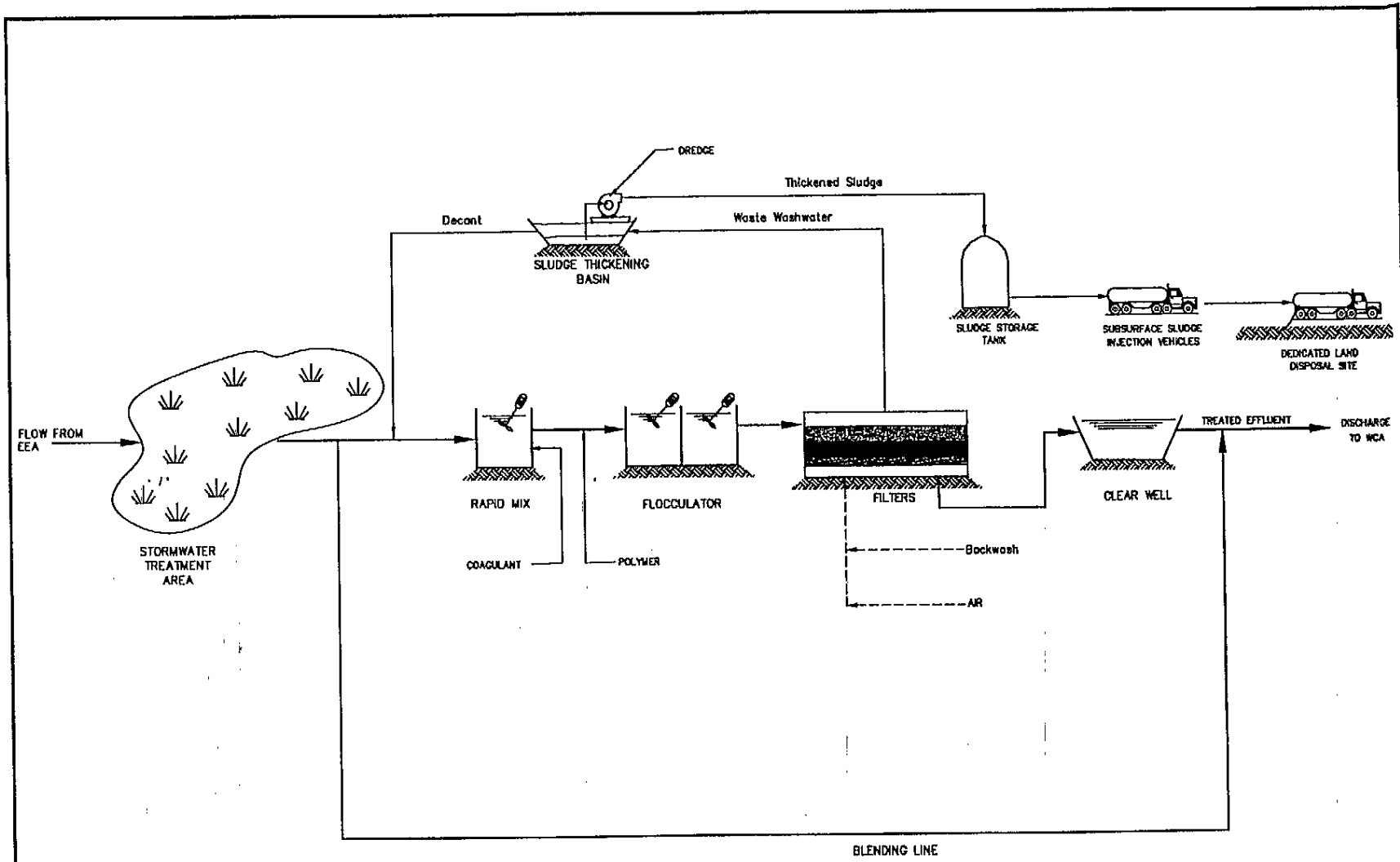

FIGURE. 4.4

STORMWATER TREATMENT AREA–
CHEMICAL TREATMENT/
DIRECT FILTRATION FLOWSHEET

PEER/Brown and Caldwell
Consultants

Table 4.4-1. Basis-of-Design and Cost Information for STA - Chemical Treatment/Direct Filtration

Parameter	Influent/Effluent P Levels									
	150/50	150/40	150/30	150/20	150/10	90/50	90/40	90/30	90/20	90/10
Basis of Design										
Influent PS capacity, mgd	2330	2330	2330	2330	2330	2330	2330	2330	2330	2330
Influent PS average flow, mgd	189	189	189	189	189	189	189	189	189	189
STA area, acres	7410	7410	7410	7410	7410	4040	4040	4040	4040	4040
FEB area, acres	0	0	0	0	0	0	0	0	0	0
Treatment plant influent PS capacity, mgd	0	42	89	155	360	0	43	95	181	420
Treatment plant influent PS average flow, mgd	0	42	83	128	176	0	42	86	130	174
Treatment plant land area, acres	0	9	17	27	37	0	9	18	27	37
Sludge disposal area, acres	0	88	174	269	370	0	88	181	273	365
Effluent PS capacity, mgd	2330	2330	2330	2330	2330	2330	2330	2330	2330	2330
Effluent PS average flow, mgd	189	189	189	189	189	189	189	189	189	189
Total land area, acres	8,151	8,258	8,362	8,476	8,598	4,444	4,551	4,663	4,774	4,886
Capital Costs, $ million										
Influent pumping station	17.87	17.87	17.87	17.87	17.87	17.87	17.87	17.87	17.87	17.87
STA	33.96	33.96	33.96	33.96	33.96	18.52	18.52	18.52	18.52	18.52
STA seepage pump station	0.78	0.78	0.78	0.78	0.78	0.43	0.43	0.43	0.43	0.43
FEB	0.00	0.00	0.00	0.00	0.00	0.00	0.00	0.00	0.00	0.00
FEB seepage pump station	0.00	0.00	0.00	0.00	0.00	0.00	0.00	0.00	0.00	0.00
Treatment plant influent pump station	0.00	0.40	0.85	1.49	3.45	0.00	0.41	0.91	1.74	4.03
Treatment plant	0.00	11.26	14.90	20.01	35.90	0.00	11.33	15.36	22.03	40.55
Sludge treatment and disposal	0.00	0.84	1.66	2.56	3.52	0.00	0.84	1.72	2.60	3.48
Effluent pump station	17.87	17.87	17.87	17.87	17.87	17.87	17.87	17.87	17.87	17.87
Subtotal	70.49	82.98	87.90	94.55	113.36	54.68	67.27	72.68	81.05	102.74
Construction contingencies (20 percent)	14.10	16.60	17.58	18.91	22.67	10.94	13.45	14.54	16.21	20.55
Subtotal, construction costs	84.59	99.58	105.48	113.45	136.03	65.62	80.72	87.21	97.26	123.29
Engineering (15 percent)	12.69	14.94	15.82	17.02	20.40	9.84	12.11	13.08	14.59	18.49
Land purchase - STA	28.53	28.53	28.53	28.53	28.53	15.55	15.55	15.55	15.55	15.55
Land purchase - FEB	0.00	0.00	0.00	0.00	0.00	0.00	0.00	0.00	0.00	0.00
Land purchase - treatment plant	0.00	0.03	0.07	0.10	0.14	0.00	0.03	0.07	0.11	0.14
Land purchase - sludge disposal	0.00	0.34	0.67	1.03	1.42	0.00	0.34	0.70	1.05	1.41
Total Capital Cost	125.80	143.42	150.56	160.14	186.53	91.02	108.76	116.62	128.56	158.89
Present Worth - Capital Cost	125.80	143.42	150.56	160.14	186.53	91.02	108.76	116.62	128.56	158.89
O&M Costs, $ million/yr										
Influent pumping station	0.52	0.52	0.52	0.52	0.52	0.52	0.52	0.52	0.52	0.52
STA	0.22	0.22	0.22	0.22	0.22	0.12	0.12	0.12	0.12	0.12
STA seepage pump station	0.12	0.12	0.12	0.12	0.12	0.07	0.07	0.07	0.07	0.07
STA sampling and monitoring	0.30	0.30	0.30	0.30	0.30	0.30	0.30	0.30	0.30	0.30
FEB	0.00	0.00	0.00	0.00	0.00	0.00	0.00	0.00	0.00	0.00
FEB seepage pump station	0.00	0.00	0.00	0.00	0.00	0.00	0.00	0.00	0.00	0.00
Treatment plant influent pump station	0.00	0.26	0.32	0.38	0.45	0.00	0.26	0.32	0.38	0.44
Chemicals	0.00	0.73	1.44	2.23	3.06	0.00	0.73	1.50	2.26	3.03
Sludge treatment and disposal	0.00	0.05	0.10	0.15	0.20	0.00	0.05	0.10	0.15	0.20
Other treatment plant O&M	0.00	0.26	0.51	0.78	1.07	0.00	0.26	0.52	0.79	1.06
Treatment plant sampling and monitoring	0.00	0.15	0.15	0.15	0.15	0.00	0.15	0.15	0.15	0.15
Effluent pump station	0.52	0.52	0.52	0.52	0.52	0.52	0.52	0.52	0.52	0.52
Total Annual O&M Cost	1.69	3.14	4.21	5.38	6.63	1.54	2.99	4.13	5.28	6.42
Present Worth - Annual O&M Cost	36.40	67.42	90.36	115.55	142.41	33.11	64.13	88.76	113.38	138.00
Present Worth - Replacement Costs, $million										
Influent pump station	1.68	1.68	1.68	1.68	1.68	1.68	1.68	1.68	1.68	1.68
STA seepage pump station	0.15	0.15	0.15	0.15	0.15	0.08	0.08	0.08	0.08	0.08
FEB seepage pump station	0.00	0.00	0.00	0.00	0.00	0.00	0.00	0.00	0.00	0.00
Treatment plant influent pump station	0.00	0.08	0.16	0.28	0.65	0.00	0.08	0.17	0.33	0.76
Chemical feed system	0.00	0.16	0.22	0.29	0.53	0.00	0.17	0.22	0.32	0.59
Other major treatment plant equipment	0.00	1.87	2.49	3.33	5.97	0.00	1.88	2.55	3.66	6.74
Sludge treatment and disposal	0.00	0.14	0.29	0.43	0.58	0.00	0.14	0.29	0.43	0.58
Effluent pump station	1.68	1.68	1.68	1.68	1.68	1.68	1.68	1.68	1.68	1.68
Total Present Worth - Replacement Costs	3.50	5.75	6.63	7.82	11.22	3.43	5.70	6.67	8.17	12.10
Salvage Value, $ million										
Influent pump station demolition cost	(3.57)	(3.57)	(3.57)	(3.57)	(3.57)	(3.57)	(3.57)	(3.57)	(3.57)	(3.57)
STA seepage pump station demolition cost	(0.16)	(0.16)	(0.16)	(0.16)	(0.16)	(0.09)	(0.09)	(0.09)	(0.09)	(0.09)
FEB seepage pump station demolition cost	0.00	0.00	0.00	0.00	0.00	0.00	0.00	0.00	0.00	0.00
Treatment plant influent pump station demolition cost	0.00	(0.08)	(0.17)	(0.30)	(0.69)	0.00	(0.08)	(0.18)	(0.35)	(0.81)
Treatment plant demolition cost	0.00	(2.25)	(2.98)	(4.00)	(7.18)	0.00	(2.27)	(3.07)	(4.41)	(8.11)
Effluent pump station demolition cost	(3.57)	(3.57)	(3.57)	(3.57)	(3.57)	(3.57)	(3.57)	(3.57)	(3.57)	(3.57)
STA restoration cost	(4.08)	(4.08)	(4.08)	(4.08)	(4.08)	(3.01)	(3.01)	(3.01)	(3.01)	(3.01)
FEB restoration cost	0.00	0.00	0.00	0.00	0.00	0.00	0.00	0.00	0.00	0.00
Sludge land restoration cost	0.00	0.00	0.00	0.00	0.00	0.00	0.00	0.00	0.00	0.00
STA land value	28.53	28.53	28.53	28.53	28.53	15.55	15.55	15.55	15.55	15.55
FEB land value	0.00	0.00	0.00	0.00	0.00	0.00	0.00	0.00	0.00	0.00
Treatment plant land value	0.00	0.03	0.07	0.10	0.14	0.00	0.03	0.07	0.11	0.14
Sludge land value	0.00	0.00	0.00	0.00	0.00	0.00	0.00	0.00	0.00	0.00
Net Salvage Value	17.14	14.84	14.06	12.94	9.41	5.31	2.99	2.12	0.66	(3.47)
Present Worth - Salvage Value	2.41	2.09	1.98	1.82	1.32	0.75	0.42	0.30	0.09	(0.49)
50 - Year Present Worth, $ million										
Capital Cost	125.80	143.42	150.56	160.14	186.53	91.02	108.76	116.62	128.56	158.89
O&M Cost	36.40	67.42	90.36	115.55	142.41	33.11	64.13	88.76	113.38	138.00
Replacement Cost	3.50	5.75	6.63	7.82	11.22	3.43	5.70	6.67	8.17	12.10
Salvage Value	(2.41)	(2.09)	(1.98)	(1.82)	(1.32)	(0.75)	(0.42)	(0.30)	(0.09)	0.49
Total	163.28	214.50	245.58	281.69	338.83	126.81	178.17	211.74	250.02	309.47
Present worth, $/million gallons treated	47.34	62.19	71.20	81.67	98.23	36.77	51.65	61.39	72.48	89.72
Present worth, $/pound P removed	56.76	67.79	71.14	75.32	84.13	110.21	123.87	122.67	124.16	134.48

ECONOMIC ANALYSIS

Economic analysis of the treatment train involved sizing of individual process units and preparing estimates of capital costs, O&M costs, replacement costs, salvage value, and present worth. Table 4.4-1 summarizes these cost data.

Capital Costs

Capital cost estimates were generated for ten scenarios involving two levels of influent phosphorus and five levels of effluent phosphorus. The costs ranged from about $91 million to $186 million.

O&M Costs

O&M cost estimates were generated for ten scenarios involving two levels of influent phosphorus and five levels of effluent phosphorus. The costs ranged from about $1.5 million to $6.6 million annually. Present worth values for the O&M costs range from about $33 million to about $142 million.

Replacement Costs

Present worth replacement cost estimates were generated for the ten scenarios involving two levels of influent P and five levels of effluent P. The costs ranged from about $3.4 million to about $12 million.

Salvage Value

Salvage values were calculated by subtracting the cost to restore the land from the value of the land. The cost to restore the land included cost to demolish the influent, seepage, and effluent pumping stations; the cost to demolish the treatment plant; and the costs associated with restoration of the land. For the 90/10 P reduction scenario, the cost of demolition and restoration exceeds the value of the land restored so that net salvage value is negative. At all of the other P reduction scenarios, restored land value exceeds the cost of demolition and restoration and net salvage value is positive. In terms of 50-year present worth, however, salvage value has little significance for the STA Chemical Treatment/Direct Filtration technology.

Present Worth Costs

Present worth estimates were made using the procedure described in the body of this report. They were made for the ten scenarios involving two levels of influent phosphorus and five levels of effluent phosphorus. They ranged from about $127 million to $339 million. This equates to about $37 to $98 per million gallons of water treated and $57 to $134 per pound of phosphorus removed.

NON-ECONOMIC ANALYSIS

The following section summarizes the analysis that was conducted for the non-economic criteria. These criteria include water quality and other non-economic issues, such as robustness, hydropattern restoration, byproduct generation, permittability, impact to the C&SF project, compliance with the EFA, and compliance with the Federal Consent Decree.

Water Quality

A conceptual level finished water quality characterization was prepared for the STA/Direct Filtration treatment train. Water quality parameters evaluated included nutrients (phosphorus and nitrogen), metals, and others (e.g., alkalinity, total dissolved solids, (TDS) and total organic carbon (TOC). Methyl mercury was specifically included in the water quality evaluation because of its importance as a constituent of concern in South Florida. The evaluation was performed for these parameters for two levels of influent quality (150 ppb and 90 ppb total P) and five levels of effluent quality ranging from 50 ppb to 10 ppb total P.

Influent composition used was as follows:

1. Influent P = 150 ppb. The concentrations of other parameters were similar to the 1995 average concentrations in inflow to the ENR Project as summarized in the Everglades Nutrient Removal Project 1995 Monitoring Report (South Florida Water Management District, 1996).

2. Influent P = 90 ppb. The concentrations of other parameters were similar to the average concentrations measured in the August 1994-August 1995 grab samples at Sampling Station G252C, which is located immediately after the buffer zone in Cell 1 of the ENR (South Florida Water Management District, undated). This assumed composition of 90 ppb P influent is speculative because it is based on grab samples within ENR only and may not be representative of EAA runoff following full implementation of BMPs.

Effluent concentrations were estimated for all parameters for systems designed to reduce P to the range of 10 to 50 ppb.

Calculation Procedures. The calculations to predict treatment train effluent quality were accomplished as follows:

1. Concentration of P in the wetlands effluent was set at 50 ppb, and the wetlands was sized to achieve that goal using the Walker equation. Using an example of an STA reducing the P concentration from 150 to 50 ppb, the Walker equation predicts a 7410-acre wetland is needed. The concentrations of non-P parameters were estimated by applying the ratio "ENR effluent concentration/ENR influent concentration" (as determined by 1995 ENR operations) to the anticipated influent composition. Using aluminum as an example, applying the ENR concentration ratio described above (0.067) to the anticipated STA influent aluminum concentration (297 ppb) gives an STA effluent aluminum concentration of 20 ppb.

2.. Concentrations of parameters in the STA/direct filtration plant effluent (prior to blending) were estimated using the following sequence of calculations:

   A. Soluble and particulate fractions for each parameter were estimated for the STA effluent using ENR data. Using total P at 50 ppb as an example, and with dissolved P being 62 percent of total P, dissolved P is then 31 ppb and particulate P is 19 ppb.

   B. A fixed dose of ferric chloride (16 mg/L as Fe) was applied to treatment plant influent. A fixed lime dose (13 mg/L as CaO) was also applied to control the reaction pH at 7.0. Good results had been obtained at pH 7.0 in Amendment 6 jar tests (Analysis and Development of Chemical Treatment Processes, Contract C-3501, Amendment 6, Technical Memorandum No.1). This dosing regime removed a fraction of dissolved material (the fraction depending on the parameter being considered) and rendered the precipitated and other suspended solids suitable for the solids separation step. Continuing the example, the dosing program precipitated 84 percent of the dissolved P, leaving 5 ppb dissolved P and 45 ppb (50 ppb - 5 ppb) particulate P in the water flowing to the solids separator. Note that dosing also increases the concentrations of some components (chloride and some trace elements impurities associated with the chemicals) and that these increases were included in the calculation.

   C. The solids separation step removed solids according to its documented capability. Conservative removal efficiencies were assumed. For example, a solids removal efficiency of 97 percent was used for direct filters. No removal of dissolved P was allowed in the filters. Filter plant effluent P was 6 ppb.

3. Concentrations of parameters in the treatment train effluent (i.e., after blending treatment plant effluent and bypassed water) were estimated by flow weighting the concentrations of treatment plant effluent and bypassed water. The bypassed water concentration was equal to the STA effluent concentration. Consider the case in which average treatment plant flow is 125 mgd and average bypassed flow is 64 mgd. Based on the explanations above, plant effluent P is 6 ppb and STA effluent P is 50 ppb. Therefore the composition of the blended flow is (125 mgd x 6 ppb + 64 mgd x 50 ppb)/(125 mgd + 64 mgd) = 19 ppb.

Tables 4.4-2 and 4.4-3 summarize the predicted composition of blended effluents for the cases where influent P are 150 and 90 ppb, respectively, and effluent P varies from 50 ppb to 10 ppb.

Table 4.4-2. Predicted Effluent Water Quality For STA-Chemical Treatment/Direct Filtration with Influent P =150 ppb

Parameter	Unit	Influent Concentration[a]	Predicted Effluent Water Quality For Influent/Effluent Levels				
			150/50	150/40	150/30	150/20	150/10
Nutrients:							
Total phosphorus	ug/L	150	50	40	31	20	9
Ammonia nitrogen	ug/L	44	51	51	51	51	51
Total Kjeldahl nitrogen	ug/L	2700	2100	1802	1512	1193	853
Nitrate nitrogen	ug/L	45	35	35	35	35	35
Nitrite nitrogen	ug/L	70	1	1	1	1	1
Total nitrogen	ug/L	3220	2136	1838	1548	1229	889
Metals:							
Aluminum	ug/L	297	20	18	15	13	10
Copper[b]	ug/L						
Iron	ug/L	358	36	156	272	400	537
Manganese	ug/L	17	27	37	47	58	70
Mercury (total)	ug/L	2.2E-03	9.1.E-04	7.7.E-04	6.3.E-04	4.8.E-04	3.1.E-04
Mercury (methyl)	ug/L	2.0E-04	6.0.E-05	5.8.E-05	5.6.E-05	5.4.E-05	5.1.E-05
Zinc	ug/L	5	3	3	3	2	2
Ions:							
Sulfate	mg/L	64	55	55	55	55	55
Silica	mg/L	27	27	26	25	24	22
Chloride	mg/L	134	157	164	171	178	186
Calcium	mg/L	75	75	77	79	81	83
Magnesium	mg/L	24	23	23	23	23	23
Sodium	mg/L	90	107	107	107	107	107
Potassium	mg/L	7	7	7	7	7	7
Others:							
Alkalinity as $CaCO_3$	mg/L	241	246	242	237	232	227
pH	s.u.	7	7	7	7	7	7
Specific conductance[b]	umho/cm						
Total dissolved solids	mg/L	659	697	706	715	724	734
Total organic carbon	mg/L	38	41	37	34	29	25

[a] Source: Everglades Nutrient Removal Project 1995 Monitoring Report published by the South Florida Water Management District.
P concentrations are influent/effluent concentrations evaluated in this study

[b] Water quality analysis for this parameter in progress at time of final report production

Table 4.4-3. Predicted Effluent Water Quality For STA - Chemical Treatment/Direct Filtration with Influent P = 90 ppb

Parameter	Unit	Influent Concentration[a]	Predicted Effluent Water Quality For Influent/Effluent Levels				
			90/50	90/40	90/30	90/20	90/10
Nutrients:							
Total phosphorus	ug/L	90	50	40	30	20	10
Ammonia nitrogen	ug/L	160	20	20	20	20	20
Total Kjeldahl nitrogen	ug/L	2700	2100	1802	1491	1179	867
Nitrate nitrogen	ug/L	250	10	10	10	10	10
Nitrite nitrogen	ug/L	70	0	0	0	0	0
Total nitrogen	ug/L	3020	2110	1812	1501	1189	877
Metals:							
Aluminum	ug/L	100	7	8	10	11	13
Copper[b]	ug/L						
Iron	ug/L	100	12	137	267	398	528
Manganese	ug/L	12	20	31	43	55	67
Mercury (total)	ug/L	1.8E-03	7.4E-04	6.2E-04	5.0E-04	3.8E-04	2.6E-04
Mercury (methyl)	ug/L	1.6E-04	4.8E-05	4.6E-05	4.5E-05	4.3E-05	4.1E-05
Zinc	ug/L	3	2	2	2	1	1
Ions:							
Sulfate	mg/L	73	64	64	64	64	64
Silica	mg/L	22	22	21	20	19	18
Chloride	mg/L	183	214	221	228	235	243
Calcium	mg/L	81	81	83	85	87	89
Magnesium	mg/L	26	26	26	26	26	26
Sodium	mg/L	119	142	142	142	142	142
Potassium	mg/L	10	10	10	10	10	10
Others:							
Alkalinity as $CaCO_3$	mg/L	275	281	277	272	267	263
pH	s.u.	7	7	7	7	7	7
Specific conductance[b]	umho/cm						
Total dissolved solids	mg/L	720	763	772	781	791	800
Total organic carbon	mg/L	40	43	39	35	31	26

[a] Source: Unpublished water quality data (except P concentrations) for period August 1994 - August 1995 at sample station G252C, South Florida Water Management District.

[b] Water quality analysis for this parameter in progress at time of final report production

General Effects of STA/Chemical Treatment/Direct Filtration on Plant Effluent Water Quality. Table 4.4-4 shows changes in water quality caused by the STA/chemical treatment/direct filtration treatment train reducing EAA P concentration from 150 ppb to 6 ppb. These changes are based on treatment plant effluent composition prior to blending. It shows the changes in terms of (1) concentration differences, with negative numbers signifying concentration decreases and positive numbers signifying concentration increases and (2) the ratio of effluent concentration to influent concentration. Such information is generally useful, since it can be applied (with caution) to EAA waters of somewhat different composition than waters feeding the ENR Project.

Table 4.4-4 shows that the treatment train can remove high percentages of P, ammonia, and nitrate. It removes metals rather well, except possibly manganese, which appears to increase based upon data from the ENR Project. It can be expected to remove about 70 percent and 40 percent of the mercury and methyl mercury, respectively. Sulfate is moderately reduced. Chloride, sodium, and TDS increase moderately, and alkalinity and TOC decrease slightly. This treatment system should have high removals of turbidity and suspended solids.

Other Non-Economic Criteria

Robustness. Since this treatment train includes an STA, it can provide significant flow equalization capacity and the opportunity to accommodate varying water depths during extreme runoff events. During periods of prolonged drought, precautions must be taken to avoid drying of the STAs which could result in re-release of accreted phosphorus. When flows greatly exceed the design flow, the STA phosphorus removal capability may be temporarily impaired. By adding a direct filtration chemical treatment facility to the STA, it can significantly improve the STAs ability to respond to changes in effluent P concentration.

Hydropattern Restoration. Due to the size and nature of the STAs, there will be a great amount of flexibility in controlling effluent discharges to the water conservation areas, thus having a great ability to restore the hydropatterns.

Byproduct Generation. Chemicals required for the treatment train include iron or alum salts for precipitation of phosphorus, caustic for pH adjustment, as necessary, and possibly polymer to enhance coagulation, flocculation, and filtration. Solids removed from the treatment processes will require thickening and subsequent disposal of the thickened sludge in a dedicated land disposal site. Because the STA removes a majority of the P, the sludge quantities generated will be less than produced by a stand alone chemical process.

Table 4.4-4. Effect of STA - Chemical Treatment/Direct Filtration on Water Quality

Parameter	Unit	Concentration change caused by treatment	Ratio of effluent concentration to concentration in EAA raw water
Nutrients:			
Total phosphorus	ug/L	-144	0.040
Ammonia nitrogen	ug/L	-389	0.116
Total Kjeldahl nitrogen	ug/L	-1,939	0.282
Nitrate nitrogen	ug/L	-415	0.078
Nitrite nitrogen	ug/L	-69	0.014
Total nitrogen	ug/L	-2,423	0.248
Metals:			
Aluminium	ug/L	-288	0.030
Copper[a]	ug/L		
Iron	ug/L	216	1.603
Manganese	ug/L	56	4.294
Mercury (total)	ug/L	-1.9E-03	0.122
Mercury (methyl)	ug/L	-1.5E-04	0.254
Molybdenum	ug/L		
Zinc	ug/L	3	0.400
Ions:			
Sulfate	mg/L	-8	0.873
Silica	mg/L	-5	0.815
Chloride	mg/L	54	1.403
Calcium	mg/L	9	1.120
Magnesium	mg/L	0	1.000
Sodium	mg/L	17	1.189
Potassium	mg/L	0	1.000
Others:			
Alkalinity as $CaCO_3$	mg/L	-15	1.104
pH	s.u.	-0.29	0.960
Specific conductance[a]	umho/cm		
Total dissolved solids	mg/L	78	1.118
Total organic carbon	mg/L	14	0.632

[a] Water quality analysis for this parameter in progress at time of final report production

Permittability. Both the EFA and the Consent Decree include specific language regarding STAs. Therefore, since this treatment train includes an STA, it would improve the permittability of the train based upon legal issues. There are reasonable assurances that this treatment train has the ability to meet the effluent P concentrations and meet Class III water quality criteria. There may, however, be perception problems because of the chemical treatment facility which might affect its ability to pass the "public interest test" required to obtain federal approvals. The treatment plant may be perceived as having a negative impact on the natural surroundings of the Everglades and the intent of EFA.

Impact on the C&SF Project. With respect to water supply, there is a potential for the STAs to have an adverse impact on the C&SF Project. This is due to the need to provide precautions during the dry periods to avoid re-release of accreted phosphorus. In this case, the STA would be a net user of water and have an impact on the water supply. Due to their size and capacity, however, the ability of the STAs to attenuate peak flow rates and store water for later release could improve current conditions.

Compliance with the EFA. Again, since the EFA includes language regarding STAs, and an STA is included in this treatment train, it would meet the specific policy of the EFA. The total implementation time for the construction of this treatment train can meet the schedule set by the EFA, and it has the ability achieve an effluent P concentration of 10 ppb.

Compliance with Federal Consent Decree. Since this treatment train includes an STA, it would meet the requirements of the Federal Consent Decree on policy issues. This is because the policy is based upon STAs. By adding the treatment facility to the STA, it has the potential of improving the water quality above the phosphorus limits and Class III water quality standards set by the federal consent decree.

RESEARCH PRIORITIES

Performance of the STAs in treating runoff form the EAA is by far the most documented of any of the treatment technologies being investigated in this evaluation. Ongoing research activities in the ENR will continue over the next several years to advance the knowledge needed for more efficient and effective designs. Specifically, relationships between P removal and loading rate, detention time, and operating water depth should be refined.

With respect to the chemical treatment-direct filtration portion of the treatment train, this investigation has identified research tasks that should be undertaken prior to implementation of full-scale systems.

1. Define/develop filter media designs that provide good solids capture and long filter runs in the face of the high solids loadings expected to occur as the result of treating EAA waters.

2. In conjunction with Task 1, evaluate the effectiveness of solids separation devices (e.g., sedimentation or flotation) that can be installed upstream of the filters to reduce the filter loadings. Such devices will be needed if filters alone cannot handle high solids loading.

3. Define appropriate chemical dosages for direct filtration. General experience indicates that chemical doses needed for good performance in pilot-scale and full-scale direct filters may be less than chemical doses needed in bench-scale tests.

4. Evaluate the effects of variables that affect filter solids capture and run length, including the following:

   - Filtering rate,
   - Filter aids,
   - Media-cleaning techniques, and
   - Influent solids concentrations.

4.5 CHEMICAL TREATMENT/HIGH RATE SETTLING

SECTION 4.5

CHEMICAL TREATMENT/HIGH RATE SETTLING

DESCRIPTION

Chemical treatment/high-rate settling employs metal salts such as aluminum sulfate, ferric chloride, or ferric sulfate to precipitate dissolved P. These chemicals also coagulate the precipitates and other solids, which allows small particulates to be subsequently coalesced (flocculated) into larger and more readily-settled agglomerates. The precipitation and coagulation reactions are pH dependent, that is they are most effective within prescribed pH ranges. Therefore, acids or bases are often added concurrently with the metal salts to adjust the pH to the desired range. Additionally, organic polymers are frequently used to increase floc size, density, and strength. Solids are separated from the liquid by gravity settling.

Influent is dosed with ferric salts in a rapid mix tank (detention time 2-5 seconds). Lime or caustic is also added to adjust pH. Polymer may be used as well to increase floc size and strength. The reacted water is flocculated in a reactor equipped with internal sludge recycle (detention time about 10 mins), and the flocculated water is settled in a clarifier equipped with lamella settlers. Overflow rates of 5 to 10 gpm/sq. ft of lamella settler can be obtained. The settlers occupy about half the clarifier surface. Settled solids withdrawn from the system are conveyed directly to a solids storage tank, then applied on dedicated land. Figure 4.5 is a schematic diagram of the treatment train.

BASIS OF EVALUATION

A mass/flow balance model, similar to the one developed for the Amendment 6 work (Contract C-3051) in 1993, was used to size flow equalization basins and determine the necessary capacity of treatment units. Influent P was either 150 ppb or 90 ppb. High-rate settling can achieve plant effluent P concentrations of 15 to 25 ppb.

For chemical treatment technologies, it is not always necessary to treat all of the influent flow to satisfy the effluent P objective. To do so would require a very large and expensive plant sized to treat peak flows. A less expensive option involves use of a smaller plant that treats only a portion of the flow during high-flow periods. When flow is below plant capacity, as it would be during dry weather, all of the flow is treated to P levels below the effluent goal. During peak flows, flow above plant capacity is routed around the plant. The bypassed flow and treated flow are then blended and discharged. During peak flows, P levels in the blended stream are likely to exceed effluent goals. However, the low-P concentrations achieved during low-flow periods offset the higher-P concentrations discharged during high-flow periods and the long-term average effluent P concentration satisfies the treatment goal. Use of flow equalization also results in lower overall

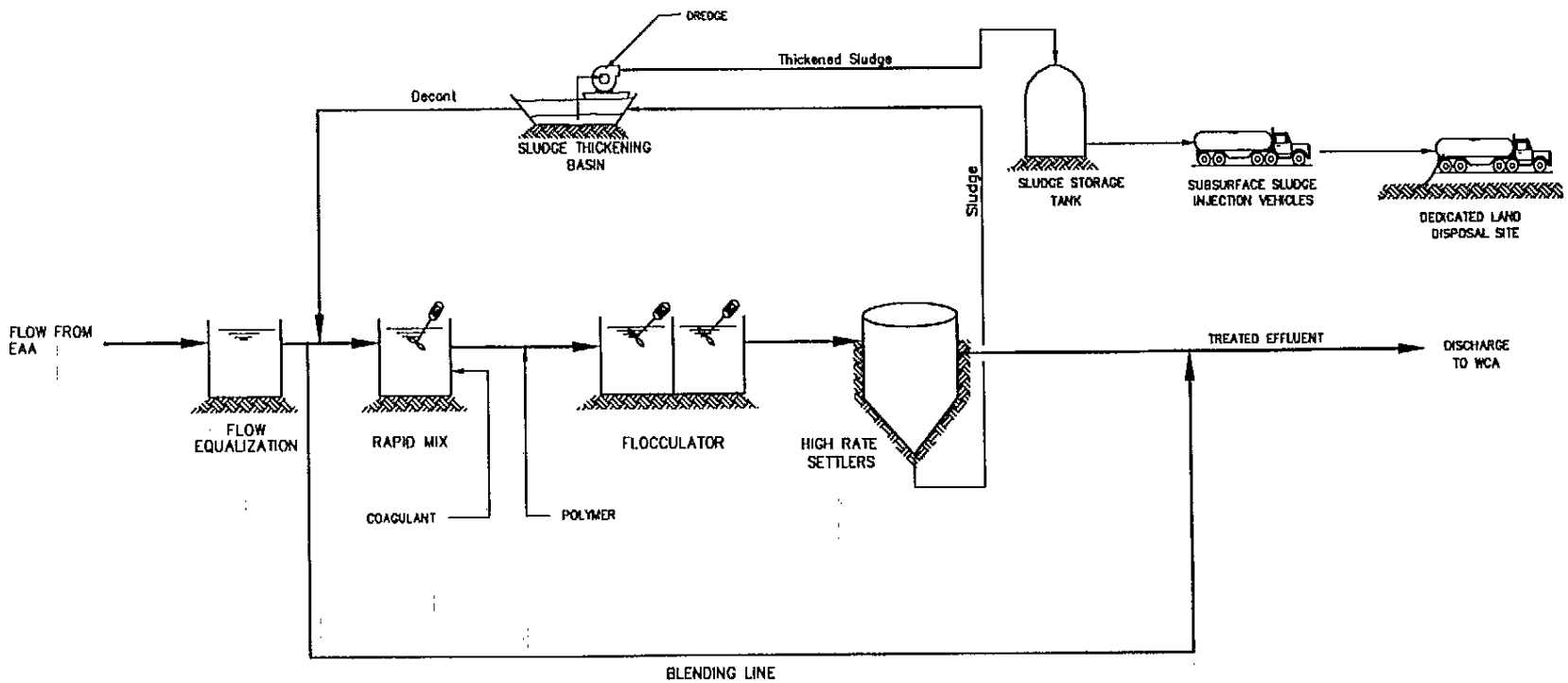

PEER/Brown and Caldwell
Consultants

FIGURE. 4.5
CHEMICAL TREATMENT/
HIGH RATE SETTLING FLOWSHEET

project costs by dampening out peak influent flows, also reducing the required design capacity of the treatment works. The mass/flow balance model discussed in Chapter 3, Methodology, was used to estimate the optimum relationship between blending, flow equalization basin volume, and treatment plant design capacity, using minimum present worth cost as the selection criterion.

EAA waters have a substantial coagulant demand due to their high organic carbon concentrations. The Amendment 6 work suggested that an iron dose of about 16 mg/L worked best with EAA waters. This iron dose and a dose of 13 mg/L lime (as CaO) for pH control were assumed for this evaluation. It is possible that ways to reduce this chemical dose can be determined by pilot work

Rapid mixers were sized to provide detention times of 3 seconds and 8 minutes, respectively, when the treatment plant is operated at full capacity. The clarifiers were sized for overflow rates of 5 gpm/sq ft when the plant is operating at full capacity. Sludge thickening ponds were sized to accommodate 6 months of 7 percent sludge to an average depth of 4 feet. Dedicated land disposal sites were sized so that nearly all water in the applied sludge could be removed by evaporation during the dry season. Table 4.5-1 summarizes the basis of design information for this treatment train.

ECONOMIC ANALYSIS

Economic analysis of the treatment trains involved sizing of individual process units and preparing estimates of capital costs, O&M costs, and 50-year present worth. The following paragraphs summarize the results of the cost analysis. Table 4.5-1 provides a cost summary for the High-Rate Settling treatment train of the various P removal scenarios.

Capital Costs

Capital cost estimates were generated for seven scenarios involving two levels of influent P and four levels of effluent P. The costs ranged from about $99 million to about $217 million.

O&M Costs

O&M cost estimates were generated for seven scenarios involving two levels of influent P and four levels of effluent P. The costs ranged from about $3.8 million to about $6.2 million annually. Present worth values for the O&M costs ranged from about $81 million to about $132 million.

Table 4.5-1. Basis of Design and Cost Information for Chemical Treatment/High Rate Settling

Parameter	Influent/Effluent P Levels									
	150/50	150/40	150/30	150/20	150/10	90/50	90/40	90/30	90/20	90/10
Basis of Design										
Influent PS capacity, mgd	2330	2330	2330	0	0	2330	2330	2330	0	0
Influent PS average flow, mgd	189	189	189	0	0	189	189	189	0	0
STA area, acres	0	0	0	0	0	0	0	0	0	0
FEB area, acres	1000	2000	3000	0	0	0	200	200	0	0
Treatment plant influent PS capacity, mgd	290	330	453	0	0	53	124	215	0	0
Treatment plant influent PS average flow, mgd	147	164	182	0	0	31	72	109	0	0
Treatment plant land area, acres	31	34	38	0	0	7	15	23	0	0
Sludge disposal area, acres	309	344	382	0	0	65	151	229	0	0
Effluent PS capacity, mgd	2330	2330	2330	0	0	2330	2330	2330	0	0
Effluent PS average flow, mgd	189	189	189	0	0	189	189	189	0	0
Total land area, acres	1,474	2,617	3,762	0	0	79	403	497	0	0
Capital Costs, $ million										
Influent pumping station	17.87	17.87	17.87	0.00	0.00	17.87	17.87	17.87	0.00	0.00
STA	0.00	0.00	0.00	0.00	0.00	0.00	0.00	0.00	0.00	0.00
STA seepage pump station	0.00	0.00	0.00	0.00	0.00	0.00	0.00	0.00	0.00	0.00
FEB	8.25	16.50	24.75	0.00	0.00	0.00	1.65	1.65	0.00	0.00
FEB seepage pump station	0.21	0.42	0.63	0.00	0.00	0.00	0.04	0.04	0.00	0.00
Treatment plant influent pump station	2.78	3.16	4.34	0.00	0.00	0.51	1.19	2.06	0.00	0.00
Treatment plant	52.72	59.16	78.98	0.00	0.00	14.54	25.98	40.64	0.00	0.00
Sludge treatment and disposal	2.94	3.28	3.64	0.00	0.00	0.62	1.44	2.18	0.00	0.00
Effluent pump station	17.87	17.87	17.87	0.00	0.00	17.87	17.87	17.87	0.00	0.00
Subtotal	102.64	118.27	148.09	0.00	0.00	51.41	66.04	82.31	0.00	0.00
Construction contingencies (20 percent)	20.53	23.65	29.62	0.00	0.00	10.28	13.21	16.46	0.00	0.00
Subtotal, construction costs	123.17	141.93	177.71	0.00	0.00	61.69	79.25	98.78	0.00	0.00
Engineering (15 percent)	18.48	21.29	26.66	0.00	0.00	9.25	11.89	14.82	0.00	0.00
Land purchase - STA	0.00	0.00	0.00	0.00	0.00	0.00	0.00	0.00	0.00	0.00
Land purchase - FEB	3.85	7.70	11.55	0.00	0.00	0.00	0.77	0.77	0.00	0.00
Land purchase - treatment plant	0.12	0.13	0.15	0.00	0.00	0.03	0.06	0.09	0.00	0.00
Land purchase - sludge disposal	1.19	1.33	1.47	0.00	0.00	0.25	0.58	0.88	0.00	0.00
Total Capital Cost	146.81	172.38	217.53	0.00	0.00	71.22	92.55	115.33	0.00	0.00
Present Worth - Capital Cost	146.81	172.38	217.53	0.00	0.00	71.22	92.55	115.33	0.00	0.00
O&M Costs, $ million/yr										
Influent pumping station	0.52	0.52	0.52	0.00	0.00	0.52	0.52	0.52	0.00	0.00
STA	0.00	0.00	0.00	0.00	0.00	0.00	0.00	0.00	0.00	0.00
STA seepage pump station	0.00	0.00	0.00	0.00	0.00	0.00	0.00	0.00	0.00	0.00
STA sampling and monitoring	0.00	0.00	0.00	0.00	0.00	0.00	0.00	0.00	0.00	0.00
FEB	0.06	0.12	0.18	0.00	0.00	0.00	0.01	0.01	0.00	0.00
FEB seepage pump station	0.03	0.06	0.08	0.00	0.00	0.00	0.01	0.01	0.00	0.00
Treatment plant influent pump station	0.41	0.43	0.46	0.00	0.00	0.24	0.30	0.35	0.00	0.00
Chemicals	2.56	2.85	3.17	0.00	0.00	0.54	1.25	1.90	0.00	0.00
Sludge treatment and disposal	0.17	0.19	0.21	0.00	0.00	0.04	0.08	0.13	0.00	0.00
Other treatment plant O&M	0.59	0.66	0.73	0.00	0.00	0.12	0.29	0.44	0.00	0.00
Treatment plant sampling and monitoring	0.30	0.30	0.30	0.00	0.00	0.30	0.30	0.30	0.00	0.00
Effluent pump station	0.52	0.52	0.52	0.00	0.00	0.52	0.52	0.52	0.00	0.00
Total Annual O&M Cost	5.16	5.65	6.17	0.00	0.00	2.29	3.30	4.19	0.00	0.00
Present Worth - Annual O&M Cost	110.89	121.44	132.49	0.00	0.00	49.20	70.87	89.91	0.00	0.00
Present Worth - Replacement Costs, $million										
Influent pump station	1.68	1.68	1.68	0.00	0.00	1.68	1.68	1.68	0.00	0.00
STA seepage pump station	0.00	0.00	0.00	0.00	0.00	0.00	0.00	0.00	0.00	0.00
FEB seepage pump station	0.04	0.08	0.12	0.00	0.00	0.00	0.01	0.01	0.00	0.00
Treatment plant influent pump station	0.52	0.59	0.91	0.00	0.00	0.10	0.22	0.39	0.00	0.00
Chemical feed system	0.77	0.87	1.16	0.00	0.00	0.21	0.38	0.59	0.00	0.00
Other major treatment plant equipment	8.76	9.83	13.12	0.00	0.00	2.42	4.32	6.75	0.00	0.00
Sludge treatment and disposal	0.49	0.55	0.60	0.00	0.00	0.10	0.24	0.36	0.00	0.00
Effluent pump station	1.68	1.68	1.68	0.00	0.00	1.68	1.68	1.68	0.00	0.00
Total Present Worth - Replacement Costs	13.93	15.27	19.17	0.00	0.00	6.18	8.52	11.46	0.00	0.00
Salvage Value, $ million										
Influent pump station demolition cost	(3.57)	(3.57)	(3.57)	0.00	0.00	(3.57)	(3.57)	(3.57)	0.00	0.00
STA seepage pump station demolition cost	0.00	0.00	0.00	0.00	0.00	0.00	0.00	0.00	0.00	0.00
FEB seepage pump station demolition cost	(0.04)	(0.08)	(0.13)	0.00	0.00	0.00	(0.01)	(0.01)	0.00	0.00
Treatment plant influent pump station demolition cost	(0.56)	(0.63)	(0.87)	0.00	0.00	(0.10)	(0.24)	(0.41)	0.00	0.00
Treatment plant demolition cost	(10.54)	(11.83)	(15.80)	0.00	0.00	(2.91)	(5.20)	(8.13)	0.00	0.00
Effluent pump station demolition cost	(3.57)	(3.57)	(3.57)	0.00	0.00	(3.57)	(3.57)	(3.57)	0.00	0.00
STA restoration cost	0.00	0.00	0.00	0.00	0.00	0.00	0.00	0.00	0.00	0.00
FEB restoration cost	(2.00)	(2.83)	(3.46)	0.00	0.00	0.00	(0.89)	(0.89)	0.00	0.00
Sludge land restoration cost	0.00	0.00	0.00	0.00	0.00	0.00	0.00	0.00	0.00	0.00
STA land value	0.00	0.00	0.00	0.00	0.00	0.00	0.00	0.00	0.00	0.00
FEB land value	3.85	7.70	11.55	0.00	0.00	0.00	0.77	0.77	0.00	0.00
Treatment plant land value	0.12	0.13	0.15	0.00	0.00	0.03	0.06	0.09	0.00	0.00
Sludge land value	0.00	0.00	0.00	0.00	0.00	0.00	0.00	0.00	0.00	0.00
Net Salvage Value	(16.32)	(14.69)	(15.71)	0.00	0.00	(10.13)	(12.66)	(15.73)	0.00	0.00
Present Worth - Salvage Value	(2.30)	(2.07)	(2.21)	0.00	0.00	(1.43)	(1.78)	(2.21)	0.00	0.00
50 - Year Present Worth, $ million										
Capital Cost	146.81	172.38	217.53	0.00	0.00	71.22	92.55	115.33	0.00	0.00
O&M Cost	110.89	121.44	132.49	0.00	0.00	49.20	70.87	89.91	0.00	0.00
Replacement Cost	13.93	15.27	19.17	0.00	0.00	6.18	8.52	11.46	0.00	0.00
Salvage Value	2.30	2.07	2.21	0.00	0.00	1.43	1.78	2.21	0.00	0.00
Total	273.93	311.15	371.41	0.00	0.00	128.02	173.71	219.91	0.00	0.00
Present worth, $/million gallons treated	79.42	90.21	107.68	0.00	0.00	37.12	50.36	63.47	0.00	0.00
Present worth, $/pound P removed	95.22	98.33	107.59	0.00	0.00	111.26	120.78	126.83	0.00	0.00

Replacement Costs

Present worth replacement cost estimates were generated for the seven scenarios involving two levels of influent P and four levels of effluent P. The costs ranged from about $8.8 million to about $19.6 million.

Salvage Value

Salvage values were calculated by subtracting the cost to restore the land from the value of the land. The costs to restore the land included costs to demolish the influent, seepage, and effluent pumping stations; the cost to demolish the treatment plant; and the costs associated with restoration of the land. In all cases, demolition and land restoration cost exceeded land value at the end of 50 years. The net salvage cost ranged from about $12.3 million to about $19.5 million. The present worth value of the net salvage cost ranges from about $1.7 million to about $2.7 million.

Present Worth

Estimates of total 50-year present worth for the chemical treatment/high-rate settling treatment train range from about $191 million to about $371 million. This equates to ranges of about $55 to $108 per million gallons of water treated and about $95 to $177 per pound of P removed over the 50-year period.

NON-ECONOMIC ANALYSIS

The following section reviews the analysis that was conducted for the non-economic criteria. These criteria include water quality and other non-economic issues, such as robustness, hydropattern restoration, byproduct generation, permittability, impact to the C&SF project, compliance with the EFA, and compliance with the federal consent decree.

Water Quality

A conceptual level finished water quality characterization for the chemical treatment/high rate settling treatment train was accomplished as part of this investigation. Water quality parameters included nutrients (phosphorus and nitrogen), metals, and others (e.g., alkalinity, total dissolved solids, (TDS) and total organic carbon (TOC). The evaluation was performed for these parameters for each treatment train for two levels of influent quality, as characterized by P concentration. Methyl mercury was specifically included in the water quality evaluation because

of its importance as a constituent of concern in South Florida. Influent composition is described below:

1. Influent P=150 ppb. The concentrations of all parameters were assumed to be similar to average concentrations in inflow to the ENR Project as summarized in the Everglades Nutrient Removal Project 1995 Monitoring Report (South Florida Water Management District, 1996). Influent P was defined as 150 ppb to maintain consistency with other work presented here. This represents a variance of about 10 percent over measured influent P.

2. Influent P=90 ppb. The concentrations of other parameters were assumed to be similar to concentrations measured in the August 1994-August 1995 grab samples at Sampling Station G252C, which is located immediately after the buffer zone in Cell 1 of the ENR (South Florida Water Management District, undated). This assumed composition of 90 ppb P influent is speculative because it is based on grab samples within ENR only and may not be representative of EAA runoff following full implementation of BMPs.

Effluent concentrations were calculated for all parameters for systems designed to reduce P to the range 10 to 50 ppb.

Calculation Procedure. Concentrations of parameters in the chemical treatment/high-rate settling effluent (prior to blending) were estimated using the following sequence of calculations:

A. Soluble and particulate fractions for each parameter were estimated for the raw water, using ENR Project data, data from Amendment 6 bench tests, and information from the literature. Using total P at 150 ppb, for example, with dissolved P being 70 percent of total P, raw water dissolved P is then 105 ppb and particulate P is 45 ppb.

B. FEB effluent concentrations were estimated by allowing no removal of dissolved materials through the FEB and 33 percent removal of particulate material. This resulted in an FEB effluent dissolved P of 105 ppb, FEB effluent particulate of 30 ppb, and FEB effluent P of 135 ppb.

C. A fixed dose of ferric chloride (16 mg/L as Fe) was applied to the treatment plant influent. A fixed lime dose (13 mg/L as CaO) was also applied to maintain the reaction at pH 7.0. Good results were obtained at pH 7.0 in Amendment 6 jar tests (Analysis and Development of Chemical Treatment Processes, Contract C-3501, Amendment 6, Technical Memorandum No.1). This dosing regime removed a fraction of dissolved material (the fraction depending on the parameter being considered) and rendered the precipitated and other suspended solids suitable for the solids separation step. The dosing program precipitated 95 percent of the dissolved P, leaving 5 ppb dissolved P and 130 ppb (135 ppb - 5 ppb) particulate P in the water flowing to the solids separator. Note that this dosing also increased the concentrations of some components (chloride and some trace elements impurities associated with the chemicals) and that these increases were included in the calculation.

D. The solids removal step then removed these solids according to its documented capability. Conservative removal efficiencies were assumed. For example, a solids removal efficiency of 85 percent and no removal of dissolved material were used for the high-rate settlers. For this example, filter plant effluent P was 25 ppb.

Concentrations of parameters in the treatment train effluent (i.e., after blending treatment plant effluent and bypassed water) were estimated by flow weighting the concentrations of treatment plant effluent and bypassed water. The bypassed water concentration was equal to the FEB effluent concentration. Consider the case in which average treatment plant flow was 164 mgd and average bypassed flow was 25 mgd. Based on the explanations above, plant effluent P was 25 ppb and FEB effluent P was 135 ppb. Therefore the composition of the blended flow = 40 ppb.

Tables 4.5-2 and 4.5-3 show predicted composition of blended effluent for the cases where influent P are 150 and 90 ppb, respectively.

General Effects of Chemical Treatment/Direct Filtration on Plant Effluent Water Quality. Table 4.5-4 shows changes in water quality caused by chemical treatment/high-rate settling. It compares untreated water composition with composition of effluent from the treatment plant for the scenario involving a 150 ppb P concentration in the raw (untreated) water. These changes are based on effluent composition prior to blending. It shows the changes in terms of (1) concentration differences, with negative numbers signifying concentration decreases and positive numbers concentration increases and (2) as the ratio of effluent concentration to influent concentration. Such information is generally useful, since it can be applied (with caution) to EAA waters of somewhat different composition than waters feeding the ENR Project.

Table 4.5-4 shows that chemical treatment/direct filtration can remove high percentages of P, and also reduce TOC significantly, about 40 percent. It can remove moderate amounts of silica (20 percent) while removing metals rather well. Addition of ferric chloride causes increased chloride and TDS concentrations (23 and 6 percent, respectively). Calcium is increased by lime addition. Chemical treatment reduces alkalinity slightly (about 10 percent) because more alkalinity is consumed by the hydrolysis of the iron reagent than is supplied by the pH control agent. Experience indicates that chemical systems will have high removals of turbidity and suspended solids.

Chemical addition can increase trace metal concentrations if the reagents contain significant amounts of metals, if they are not effectively precipitated, and/or their chemical reaction products are inefficiently removed by the solids separation devices.

Discussion of Other Non-Economic Criteria

Robustness. Chemical treatment/high-rate sedimentation is capable of responding to wide variations in flow and influent characteristics while still achieving P removal objectives. Phosphorus reductions to between 50 and 15 to 25 ppb were achieved by varying operating

Table 4.5-2. Predicted Effluent Water Quality For Chemical Treatment/High Rate Settling with Influent P = 150 ppb

Parameter	Unit	Influent Concentration[a]	Predicted Effluent Water Quality For Influent/Effluent Levels				
			150/50	150/40	150/30	150/20	150/10
Nutrients:							
Total phosphorus	ug/L	150	50	40	30		
Ammonia nitrogen	ug/L	440	440	440	440		
Total Kjeldahl nitrogen	ug/L	2700	1483	1356	1221		
Nitrate nitrogen	ug/L	450	450	450	450		
Nitrite nitrogen	ug/L	70	70	70	70		
Total nitrogen	ug/L	3220	2003	1876	1741		
Metals:			0	0	0		
Aluminum	ug/L	297	98	84	70		
Copper[b]	ug/L						
Iron	ug/L	358	2026	2227	2441		
Manganese	ug/L	17	58	63	69		
Mercury (total)	ug/L	2.2E-03	9.5.E-04	8.4.E-04	7.3.E-04		
Mercury (methyl)	ug/L	2.0E-04	1.4.E-04	1.3.E-04	1.3.E-04		
Zinc	ug/L	5	3	3	3		
Ions:							
Sulfate	mg/L	64	63	63	63		
Silica	mg/L	27	24	24	23		
Chloride	mg/L	134	158	161	164		
Calcium	mg/L	75	82	83	84		
Magnesium	mg/L	24	23	23	23		
Sodium	mg/L	90	90	90	90		
Potassium	mg/L	7	7	7	7		
Others:							
Alkalinity as $CaCO_3$	mg/L	241	225	224	222		
pH	s.u.	7	7	7	7		
Specific conductance[b]	umho/cm						
Total dissolved solids	mg/L	659	690	694	698		
Total organic carbon	mg/L	38	27	26	24		

[a] Source: Everglades Nutrient Removal Project 1995 Monitoring Report published by the South Florida Water Management District. P concentrations are influent/effluent concentrations evaluated in this study

[b] Water quality analysis for this parameter in progress at time of final report production

Table 4.5-3. Predicted Effluent Water Quality For Chemical Treatment/High Rate Settling with Influent P = 90 ppb

Parameter	Unit	Influent Concentration[a]	Predicted Effluent Water Quality For Influent/Effluent Levels				
			90/50	90/40	90/30	90/20	90/10
Nutrients:							
Total phosphorus	ug/L	90	50	40	30	20	
Ammonia nitrogen	ug/L	160	160	160	160	160	
Total Kjeldahl nitrogen	ug/L	2700	1953	1763	1572	1382	
Nitrate nitrogen	ug/L	250	250	250	250	250	
Nitrite nitrogen	ug/L	70	70	70	70	70	
Total nitrogen	ug/L	3020	2273	2083	1892	1702	
Metals:							
Aluminum	ug/L	100	103	104	105	106	
Copper[b]	ug/L						
Iron	ug/L	100	1242	1612	1983	2353	
Manganese	ug/L	12	37	46	56	65	
Mercury (total)	ug/L	1.8E-03	1.1E-03	9.1E-04	7.6E-04	6.1E-04	
Mercury (methyl)	ug/L	1.6E-04	1.2E-04	1.1E-04	1.1E-04	1.0E-04	
Zinc	ug/L	3	3	2	2	2	
Ions:							
Sulfate	mg/L	73	73	73	73	73	
Silica	mg/L	22	20	19	19	18	
Chloride	mg/L	183	198	203	207	212	
Calcium	mg/L	81	85	87	88	89	
Magnesium	mg/L	26	26	26	26	26	
Sodium	mg/L	119	119	119	119	119	
Potassium	mg/L	10	10	10	10	10	
Others:							
Alkalinity as $CaCO_3$	mg/L	275	265	262	259	256	
pH	s.u.	7	7	7	7	7	
Specific conductance[b]	umho/cm						
Total dissolved solids	mg/L	720	739	745	752	758	
Total organic carbon	mg/L	40	35	34	32	31	

[a] Source: Unpublished water quality data (except P concentrations) for period August 1994 - August 1995 at sample station G252C, South Florida Water Management District.

[b] Water quality analysis for this parameter in progress at time of final report production

Table 4.5-4. Effect of High-Rate Settling on Water Quality

Parameter	Unit	Concentration change caused by treatment	Ratio of effluent concentration to concentration in EAA raw water
Nutrients:			
Total phosphorus	ug/L	-126	0.167
Ammonia nitrogen	ug/L	0	1.000
Total Kjeldahl nitrogen	ug/L	-1,531	0.433
Nitrate nitrogen	ug/L	0	1.000
Nitrite nitrogen	ug/L	0	1.000
Total nitrogen	ug/L	-1,531	0.525
Metals:			
Aluminum	ug/L	-233	0.216
Copper[a]	ug/L		
Iron	ug/L	2,166	7.051
Manganese	ug/L	54	4.161
Mercury (total)	ug/L	-1.5E-03	0.312
Mercury (methyl)	ug/L	-7.4E-05	0.632
Zinc	ug/L	-2	0.619
Ions:			
Sulfate	mg/L	0	1.000
Silica	mg/L	-4	0.852
Chloride	mg/L	31	1.228
Calcium	mg/L	9	1.125
Magnesium	mg/L	0	1.000
Sodium	mg/L	0	1.000
Potassium	mg/L	0	1.000
Others:			
Alkalinity as $CaCO_3$	mg/L	-20	0.917
pH	s.u.	-0.29	0.960
Specific conductance[a]	umho/cm		
Total dissolved solids	mg/L	40	1.061
Total organic carbon	mg/L	-14	0.632

[a] Water quality analysis for this parameter in progress at time of final report production

parameters such as chemical feed rate, ratios of treated and untreated flows, and number of treatment units in service. Chemical feed rates can be paced to coincide with changes in plant inflow and phosphorus and total organic carbon concentrations. Additional flexibility in handling flow variations was provided by FEB located at the headworks. The FEB serve to dampen peak flows.

Hydropattern Restoration. Without a significant retention or storage area associated with this treatment train there will be limited flexibility in controlling the effluent discharges to the water conservation areas, thus impacting the hydropattern of the Everglades. The FEBs can reduce this impact, but the limited size of the FEB may not reduce this impact significantly.

Byproduct Generation. Chemicals required for the treatment trains include iron for precipitation of phosphorus, lime for pH adjustment and possibly polymer addition to enhance coagulation, flocculation, and sedimentation. Solids generated by this treatment processes require thickening and subsequent disposal in a dedicated land disposal site.

Permittability. Both the EFA and the Federal Consent Decree include language regarding STAs. Therefore, the permittability of any treatment train that does not include an STA could be non-responsive to the law. There are reasonable assurances, however, that this treatment train will meet current effluent P requirements, the water quality objectives established by the EFA and the Federal Consent Decree. However, this treatment train might not pass the "public interest test" required to obtain federal approvals due to the perception by the public that a chemical treatment facility would have a negative impact on the natural surroundings and intent of the Everglades and the intent of the EFA.

Impact on the C&SF Project. With respect to water supply, chemical treatment/high-rate settling would have little effect on the C&SF Project. The FEB at the beginning of the treatment train provides some storage capacity to attenuate peak flow rates and to store water for later release. The FEBs, however, are relatively small and they would have little effect on the C&SF Project.

Compliance with the EFA. While the EFA specifically includes language regarding STAs, and a STA is not part of this treatment train, chemical treatment/high-rate settling does meet the intent of the policy requirements of the EFA. The system cannot achieve an effluent concentration of 10 ppb for P. The train should achieve the restoration goals of the ECP.

Compliance with Federal Consent Decree. High-Rate Settling does not meet the requirements of the federal consent decree in policy issues because the policy is based upon STAs. Chemical treatment/high-rate settling, however, could improve upon the phosphorus and Class III water quality limits set by this decree.

RESEARCH PRIORITIES

This investigation has identified some research areas that should be undertaken prior to implementation of full-scale systems. Those identified so far include:

1. The effects of processing rate (gpm/sq.ft.), iron dose, polymer dose, pH, and sludge recycle rates on the quality of the DAF effluent and solids concentration of the settled solids needs to be evaluated.

2. Particulate P removal efficiencies using sedimentation in simulated FEBs needs to be determined. Variables used for evaluation should include flow rate, water depth, and detention time.

4.6 STA - CHEMICAL TREATMENT/ HIGH RATE SETTLING

SECTION 4.6

STORMWATER TREATMENT AREA AND CHEMICAL TREATMENT/HIGH RATE SETTLING

DESCRIPTION

This treatment train couples biological treatment in a stormwater treatment area (STA) with chemical treatment/high-rate settling. Figure 4.6 is a schematic drawing of the treatment train.

STAs are large, man-made wetland areas which, for the purposes of this evaluation, have been defined as wetlands constructed on muck soils where emergent vegetation dominates. STAs are designed to remove nutrients from stormwater by retaining the water and exposing it to a set of naturally occurring biological, chemical, and physical processes. In this evaluation, wetland vegetation is assumed to grow naturally over time. Phosphorus is taken up by the vegetation and transferred to the muck soil when the vegetation dies and accumulates there.

Chemical Treatment/High-Rate Settling employs metal salt, to precipitate dissolved P. Solids are separated from the liquid by gravity settling. The dosed water is flocculated in a reactor equipped with internal sludge recycle. The recycle feature may increase the rate of reaction and increase sludge density. The clarifier is equipped with lamella settlers. Lamella settlers are composed of parallel inclined plates. Laminar flow is established in the inclined plates, providing quiescent settling conditions. Solids settle to the plates, coalesce on the plates to form larger agglomerates, then slide down the plates and settle in the clarifier. Quiescent conditions within the lamella settlers coupled with very short settling distances (a few inches) provide very efficient settling at high clarifier overflow rates. Settled sludge is routed to settling ponds. Pond supernatant is returned to the head of the plant. Solids are removed from the settling ponds during dry periods and applied on dedicated land. More detailed descriptions of STAs and Chemical Treatment/High-Rate Settling are presented in Sections 4.1 and 4.5 of this report.

BASIS OF EVALUATION

In the evaluation of this treatment train, the STA was sized to achieve an effluent P concentration of 50 ppb. A model, presented in an August 1995 paper authored by Dr. William J. Walker, Jr. entitled "Design Basis for Everglades Stormwater Treatment Areas," was used to estimate the STA area needed to attain this goal. Treatment plant capacities needed to attain effluent goals were determined in a flow/mass balance model described in the body of this report. The high-rate

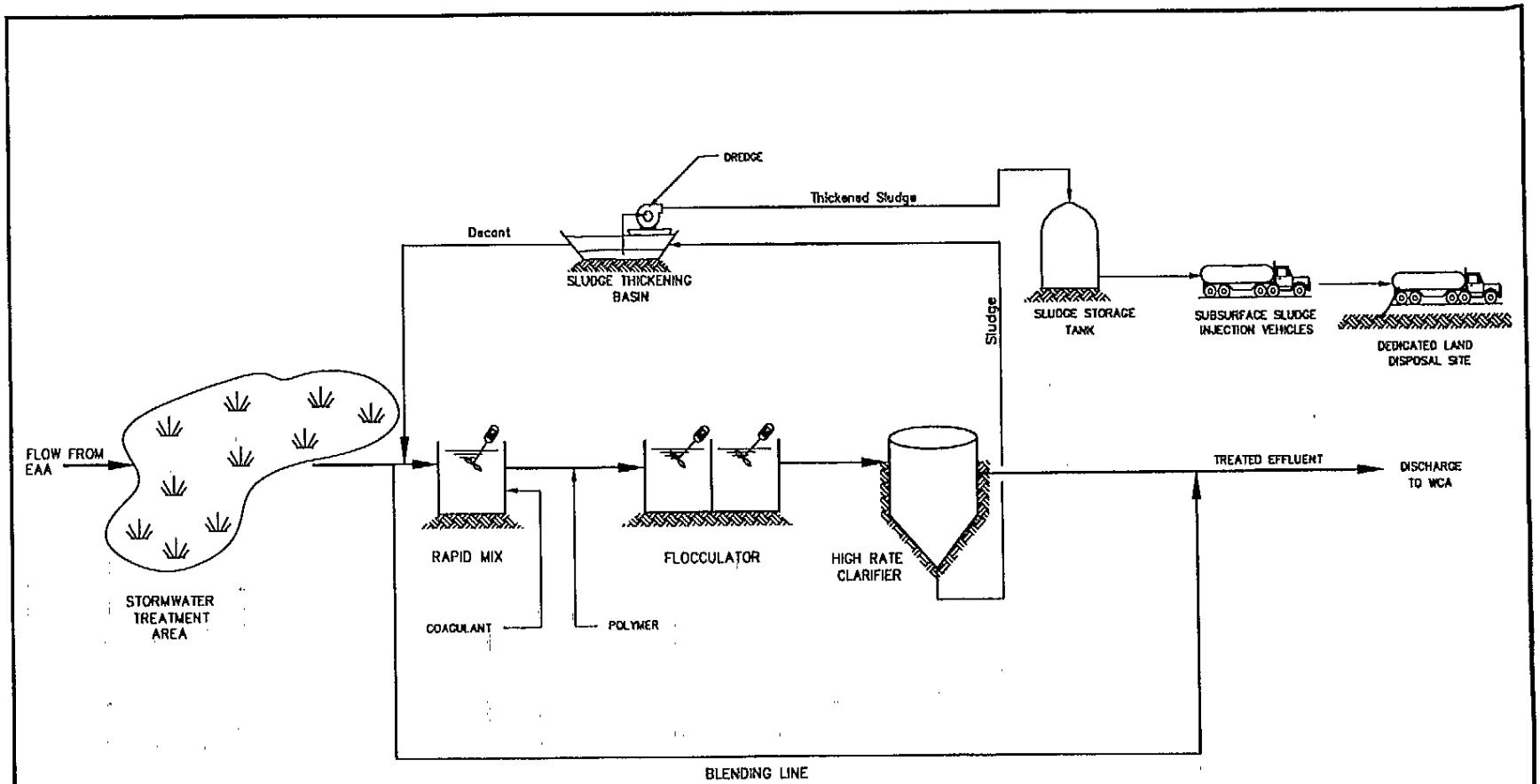

FIGURE. 4.6
STORMWATER TREATMENT AREA-
CHEMICAL TREATMENT/
HIGH RATE SETTLING FLOWSHEET

PEER/Brown and Caldwell
Consultants

settlers are sized for overflow rates of 5 gpm/sq ft when the treatment plant is operating at full capacity. Sludge thickening ponds are sized to accumulate 6 months of 7 percent sludge to an average depth of 4 feet. Dedicated land disposal sites are sized so that nearly all water in the applied sludge could be removed by evaporation during the dry season. The basis of design section of Table 4.6-1 presents the STA sizes and treatment plant capacities used in this evaluation.

ECONOMIC ANALYSIS

Economic analysis of the treatment train involved sizing of individual process units and preparing estimates of capital costs, O&M costs, replacement costs, salvage value, and present worth. Table 4.6 summarizes the cost data.

Capital Costs

Capital cost estimates were generated for ten scenarios involving two levels of influent phosphorus and five levels of effluent phosphorus. The costs ranged from about $91 million to $189 million.

O&M Costs

O&M cost estimates were generated for ten scenarios involving two levels of influent phosphorus and five levels of effluent phosphorus. The costs ranged from about $1.5 million to $6 million annually. Present worth values for the O&M costs range from about $33 million to about $124 million.

Replacement Costs

Present worth replacement cost estimates were generated for the ten scenarios involving two levels of influent P and five levels of effluent P. The costs ranged from about $3.4 million to about $13 million.

Table 4.6-1. Basis of Design and Cost Information for STA - Chemical Treatment/High Rate Sedimentation

Parameter	Influent/Effluent P Levels									
	150/50	150/40	150/30	150/20	150/10	90/50	90/40	90/30	90/20	90/10
Basis of Design										
Influent PS capacity, mgd	2330	2330	2330	2330	0	2330	2330	2330	2330	0
Influent PS average flow, mgd	189	189	189	189	0	189	189	189	189	0
STA area, acres	7410	7410	7410	7410	0	4040	4040	4040	4040	0
FEB area, acres	0	0	0	0	0	0	0	0	0	0
Treatment plant influent PS capacity, mgd	0	49	107	209	0	0	51	116	257	0
Treatment plant influent PS average flow, mgd	0	48	98	150	0	0	48	98	150	0
Treatment plant land area, acres	0	10	21	32	0	0	10	21	32	0
Sludge disposal area, acres	0	101	206	315	0	0	101	206	315	0
Effluent PS capacity, mgd	2330	2330	2330	2330	0	2330	2330	2330	2330	0
Effluent PS average flow, mgd	189	189	189	189	0	189	189	189	189	0
Total land area, acres	8,151	8,273	8,400	8,532	0	4,444	4,566	4,693	4,825	0
Capital Costs, $ million										
Influent pumping station	17.87	17.87	17.87	17.87	0.00	17.87	17.87	17.87	17.87	0.00
STA	33.96	33.96	33.96	33.96	0.00	18.52	18.52	18.52	18.52	0.00
STA seepage pump station	0.78	0.78	0.78	0.78	0.00	0.43	0.43	0.43	0.43	0.00
FEB	0.00	0.00	0.00	0.00	0.00	0.00	0.00	0.00	0.00	0.00
FEB seepage pump station	0.00	0.00	0.00	0.00	0.00	0.00	0.00	0.00	0.00	0.00
Treatment plant influent pump station	0.00	0.47	1.03	2.00	0.00	0.00	0.49	1.11	2.46	0.00
Treatment plant	0.00	13.89	23.24	39.67	0.00	0.00	14.22	24.69	47.40	0.00
Sludge treatment and disposal	0.00	0.96	1.96	3.00	0.00	0.00	0.96	1.96	3.00	0.00
Effluent pump station	17.87	17.87	17.87	17.87	0.00	17.87	17.87	17.87	17.87	0.00
Subtotal	70.49	85.81	96.71	115.16	0.00	54.68	70.35	82.44	107.55	0.00
Construction contingencies (20 percent)	14.10	17.16	19.34	23.03	0.00	10.94	14.07	16.49	21.51	0.00
Subtotal, construction costs	84.58	102.97	116.05	138.19	0.00	65.62	84.42	98.93	129.06	0.00
Engineering (15 percent)	12.69	15.45	17.41	20.73	0.00	9.84	12.66	14.84	19.36	0.00
Land purchase - STA	28.53	28.53	28.53	28.53	0.00	15.55	15.55	15.55	15.55	0.00
Land purchase - FEB	0.00	0.00	0.00	0.00	0.00	0.00	0.00	0.00	0.00	0.00
Land purchase - treatment plant	0.00	0.04	0.08	0.12	0.00	0.00	0.04	0.08	0.12	0.00
Land purchase - sludge disposal	0.00	0.39	0.79	1.21	0.00	0.00	0.39	0.79	1.21	0.00
Total Capital Cost	125.80	147.37	162.86	188.78	0.00	91.02	113.06	130.20	165.31	0.00
Present Worth - Capital Cost	125.80	147.37	162.86	188.78	0.00	91.02	113.06	130.20	165.31	0.00
O&M Costs, $ million/yr										
Influent pumping station	0.52	0.52	0.52	0.52	0.00	0.52	0.52	0.52	0.52	0.00
STA	0.22	0.22	0.22	0.22	0.00	0.12	0.12	0.12	0.12	0.00
STA seepage pump station	0.12	0.12	0.12	0.12	0.00	0.07	0.07	0.07	0.07	0.00
STA sampling and monitoring	0.30	0.30	0.30	0.30	0.00	0.30	0.30	0.30	0.30	0.00
FEB	0.00	0.00	0.00	0.00	0.00	0.00	0.00	0.00	0.00	0.00
FEB seepage pump station	0.00	0.00	0.00	0.00	0.00	0.00	0.00	0.00	0.00	0.00
Treatment plant influent pump station	0.00	0.27	0.34	0.41	0.00	0.00	0.27	0.34	0.41	0.00
Chemicals	0.00	0.83	1.70	2.61	0.00	0.00	0.83	1.70	2.61	0.00
Sludge treatment and disposal	0.00	0.06	0.11	0.17	0.00	0.00	0.06	0.11	0.17	0.00
Other treatment plant O&M	0.00	0.19	0.39	0.60	0.00	0.00	0.19	0.39	0.60	0.00
Treatment plant sampling and monitoring	0.00	0.30	0.30	0.30	0.00	0.00	0.30	0.30	0.30	0.00
Effluent pump station	0.52	0.52	0.52	0.52	0.00	0.52	0.52	0.52	0.52	0.00
Total Annual O&M Cost	1.69	3.34	4.54	5.79	0.00	1.54	3.19	4.39	5.63	0.00
Present Worth - Annual O&M Cost	36.40	71.83	97.56	124.31	0.00	33.11	68.55	94.27	121.03	0.00
Present Worth - Replacement Costs, $million										
Influent pump station	1.68	1.68	1.68	1.68	0.00	1.68	1.68	1.68	1.68	0.00
STA seepage pump station	0.15	0.15	0.15	0.15	0.00	0.08	0.08	0.08	0.08	0.00
FEB seepage pump station	0.00	0.00	0.00	0.00	0.00	0.00	0.00	0.00	0.00	0.00
Treatment plant influent pump station	0.00	0.09	0.19	0.38	0.00	0.00	0.09	0.21	0.46	0.00
Chemical feed system	0.00	0.20	0.34	0.58	0.00	0.00	0.21	0.36	0.69	0.00
Other major treatment plant equipment	0.00	2.31	3.86	6.59	0.00	0.00	2.36	4.10	7.88	0.00
Sludge treatment and disposal	0.00	0.16	0.33	0.50	0.00	0.00	0.16	0.33	0.50	0.00
Effluent pump station	1.68	1.68	1.68	1.68	0.00	1.68	1.68	1.68	1.68	0.00
Total Present Worth - Replacement Costs	3.50	6.26	8.22	11.55	0.00	3.43	6.25	8.43	12.96	0.00
Salvage Value, $ million										
Influent pump station demolition cost	(3.57)	(3.57)	(3.57)	(3.57)	0.00	(3.57)	(3.57)	(3.57)	(3.57)	0.00
STA seepage pump station demolition cost	(0.16)	(0.16)	(0.16)	(0.16)	0.00	(0.09)	(0.09)	(0.09)	(0.09)	0.00
FEB seepage pump station demolition cost	0.00	0.00	0.00	0.00	0.00	0.00	0.00	0.00	0.00	0.00
Treatment plant influent pump station demolition cost	0.00	(0.09)	(0.21)	(0.40)	0.00	0.00	(0.10)	(0.22)	(0.49)	0.00
Treatment plant demolition cost	0.00	(2.78)	(4.65)	(7.93)	0.00	0.00	(2.84)	(4.94)	(9.48)	0.00
Effluent pump station demolition cost	(3.57)	(3.57)	(3.57)	(3.57)	0.00	(3.57)	(3.57)	(3.57)	(3.57)	0.00
STA restoration cost	(4.08)	(4.08)	(4.08)	(4.08)	0.00	(3.01)	(3.01)	(3.01)	(3.01)	0.00
FEB restoration cost	0.00	0.00	0.00	0.00	0.00	0.00	0.00	0.00	0.00	0.00
Sludge land restoration cost	0.00	0.00	0.00	0.00	0.00	0.00	0.00	0.00	0.00	0.00
STA land value	28.53	28.53	28.53	28.53	0.00	15.55	15.55	15.55	15.55	0.00
FEB land value	0.00	0.00	0.00	0.00	0.00	0.00	0.00	0.00	0.00	0.00
Treatment plant land value	0.00	0.04	0.08	0.12	0.00	0.00	0.04	0.08	0.12	0.00
Sludge land value	0.00	0.00	0.00	0.00	0.00	0.00	0.00	0.00	0.00	0.00
Net Salvage Value	17.14	14.31	12.37	8.93	0.00	5.31	2.40	0.22	(4.55)	0.00
Present Worth - Salvage Value	2.41	2.01	1.74	1.26	0.00	0.75	0.34	0.03	(0.64)	0.00
50 - Year Present Worth, $ million										
Capital Cost	125.80	147.37	162.86	188.78	0.00	91.02	113.06	130.20	165.31	0.00
O&M Cost	36.40	71.83	97.56	124.31	0.00	33.11	68.55	94.27	121.03	0.00
Replacement Cost	3.50	6.26	8.22	11.55	0.00	3.43	6.25	8.43	12.96	0.00
Salvage Value	(2.41)	(2.01)	(1.74)	(1.26)	0.00	(0.75)	(0.34)	(0.03)	0.64	0.00
Total	163.28	223.45	266.90	323.39	0.00	126.81	187.53	232.87	299.94	0.00
Present worth, $/million gallons treated	47.34	64.78	77.38	93.76	0.00	36.77	54.37	67.51	86.96	0.00
Present worth, $/pound P removed	56.76	70.62	77.32	86.47	0.00	110.21	130.38	134.92	148.95	0.00

Salvage Value

Salvage values were calculated by subtracting the cost to restore the land from the value of the land. The cost to restore the land included cost to demolish the influent, seepage, and effluent pumping stations; the cost to demolish the treatment plant; and the costs associated with restoration of the land. At the 90/20 P reduction scenario, the cost of demolition and restoration exceeds the value of the land restored so that net salvage value is negative. At all of the remaining P reduction scenarios, restated land value exceeds the cost of demolition and net salvage is positive. In terms of 50-year present worth, however, salvage value has little significance for the STA-Chemical Treatment/High-Rate Sedimentation technology.

Present Worth Costs

Present worth estimates were made using the procedure described in the body of this report. They were made for the ten scenarios involving two levels of influent phosphorus and several levels of effluent phosphorus. The costs ranged from about $127 million to $323 million. This equates to about $37 to $94 per million gallons of water treated and $57 to $149 per pound of phosphorus removed.

NON-ECONOMIC ANALYSIS

The following section summarizes the analysis that was conducted for the non-economic criteria. These criteria include water quality and other non-economic issues, such as robustness, hydropattern restoration, byproduct generation, permittability, impact to the C&SF project, compliance with the EFA, and compliance with the Federal Consent Decree.

Water Quality

A conceptual-level finished water quality characterization was prepared for the Chemical Treatment/High-Rate Settling treatment train. Water quality parameters included nutrients (phosphorus and nitrogen), metals, and others (e.g., alkalinity, total dissolved solids, (TDS) and total organic carbon (TOC). Methyl mercury was specifically included in the water quality evaluation because of its importance as a constituent of concern in South Florida. The evaluation was performed for these parameters for two levels of influent quality (150 ppb and 90 ppb total P) and several levels of effluent quality, ranging from 50 ppb to 10 ppb total P.

Influent composition used was as follows:

1. Influent P = 150 ppb. The concentrations of other parameters were similar to the 1995 average concentrations in inflow to the ENR Project summarized in the Everglades Nutrient Removal Project 1995 Monitoring Report (South Florida Water Management District, 1996).

2. Influent P = 90 ppb. The concentrations of other parameters were similar to the average concentrations measured in the August 1994-August 1995 grab samples at Sampling Station G252C, which is located immediately after the buffer zone in Cell 1 of the ENR (South Florida Water Management District, undated). This assumed composition of 90 ppb P influent is speculative because it is based on grab samples within ENR only and may not be representative of EAA runoff following full implementation of BMPs.

Effluent concentrations were estimated for all parameters for systems designed to reduce P to the range of 10 to 50 ppb.

Calculation Procedures. The calculations to predict treatment train effluent quality were done as follows:

1. Concentration of P in the wetlands effluent was set at 50 ppb, and the wetlands was sized to achieve that goal using the Walker equation. Using an example of an STA reducing the P concentration from 150 to 50 ppb, the Walker equation predicts a 7410-acre wetland is needed. The concentrations of non-P parameters were estimated by applying the ratio "ENR effluent concentration/ENR influent concentration" (as determined by 1995 ENR operations) to the anticipated influent composition. Using aluminum as another example, applying the ENR concentration ratio described above (0.067) to the anticipated STA influent aluminum concentration (297 ppb) gives an STA effluent aluminum concentration of 20 ppb.

2. Concentrations of parameters in the STA/High-Rate Settling (prior to blending) were estimated using the following sequence of calculations:

   A. Soluble and particulate fractions for each parameter were estimated for the STA effluent using ENR data. Using P at 50 ppb as an example with dissolved P being 62 percent of P, raw water dissolved P is 31 ppb and particulate P is 19 ppb.

   B. A fixed dose of ferric chloride (16 mg/L as Fe) was applied to treatment plant influent. A fixed lime dose (13 mg/L as CaO) was also applied to control the reaction pH at 7.0. Good results had been obtained at pH 7.0 in Amendment 6 jar tests (Analysis and Development of Chemical Treatment Processes, Contract C-3501, Amendment 6, Technical Memorandum No.1). This dosing regime removed a fraction of dissolved material (the fraction depending on the parameter being considered) and rendered the precipitated and other suspended solids suitable for the solids separation step. Continuing the example, the dosing program precipitated 84 percent of the dissolved P, leaving 5 ppb dissolved P and 45 ppb (50 ppb - 5 ppb) particulate P in the water

flowing to the solids separator. Note that dosing also increases the concentrations of some components (chloride and some trace elements impurities associated with the chemicals) and that these increases were included in the calculation.

C. The solids separation step removed solids according to its documented capability. Conservative efficiencies were assumed. For example, a solids removal efficiency of 85 percent was used for chemical treatment/high-rate settling. Plant effluent P was 12 ppb [(1 - 0.85) 45 + 5].

3. Concentrations of parameters in the treatment train effluent (i.e., after blending treatment plant effluent and bypassed water) were estimated by flow weighting the concentrations of treatment plant effluent and bypassed water. The bypassed water concentration was equal to the STA effluent concentration. Consider the case in which average treatment plant flow is 98 mgd and average bypassed flow is 91 mgd. Based on the explanations above, plant effluent P is 12 ppb and STA effluent P is 50 ppb. Therefore the composition of the blended flow is (98 mgd x 12 ppb + 91 mgd x 50 ppb)/(98 mgd + 91 mgd) = 30 ppb.

Tables 4.6-2 and 4.6-3 summarize the predicted composition of blended effluents for the cases where influent P are 150 and 90 ppb, respectively.

General Effects of STA/Chemical Treatment/High-Rate Settling on Plant Effluent Water Quality. Table 4.6-4 shows changes in water quality caused by the STA/chemical treatment/high-rate settling treatment train reducing EAA P concentration from 150 ppb to 12 ppb. These changes are based on effluent composition prior to blending. It shows the changes in terms of (1) concentration differences, with negative numbers signifying concentration decreases and positive numbers significantly concentration increases and (2) the ratio of effluent concentration to influent concentration. Such information is generally useful, since it can be applied (with caution) to EAA waters of somewhat different composition than waters feeding the ENR Project.

Table 4.6-3 shows the treatment train can remove high percentages of P, ammonia, and nitrate. It removes metals rather well, except possibly manganese and iron, which appear to increase based upon data from the ENR Project. It can be expected to remove about 85-75 percent and 40 percent of the mercury and methyl mercury, respectively. Sulfate is moderately reduced. Chloride, sodium, calcium, and TDS increase moderately, and alkalinity and TOC decrease slightly. This train should have high removals of turbidity and suspended solids.

Other Non-Economic Criteria

Robustness. Since this treatment train includes an STA, it can provide significant flow equalization capacity and the opportunity to accommodate varying water depths during extreme runoff events. During periods of prolonged drought, precautions must be taken to avoid drying of

the STAs which could result in re-release of accreted phosphorus. When flows greatly exceed the design flow, the STA phosphorus removal capability may be temporarily impaired. By adding a treatment facility to the STA, it can significantly improve the STAs ability to respond to changes in effluent P discharge requirements.

Hydropattern Restoration. Due to the size and nature of the STAs, there will be a great amount of flexibility in controlling effluent discharges to the water conservation areas, thus having a great ability to restore the hydropatterns.

Byproduct Generation. Chemicals required for the treatment train include iron for precipitation of phosphorus, lime for pH adjustment, as necessary, and possibly polymer to enhance coagulation, flocculation, and filtration. Solids removed from the treatment processes will require thickening and subsequent disposal on dedicated land disposal site. Sludge production will be less than that generated from a stand-alone high-rate settling chemical treatment plant.

Permittability. Both the EFA and the Consent Decree include language regarding STAs. Therefore, since this treatment train includes an STA, it would improve the operating permittability of the train based upon legal issues. There are reasonable assurances that this treatment train has the ability to meet the current effluent P concentrations and meet Class III water quality criteria. This train configuration is limited in its ability to potentially meet a very low Phase II threshold P concentration. There may be perception problems because the treatment facility may fail to pass the "public interest test" required to obtain federal approvals. The treatment plant may be perceived as having a negative impact on the natural surroundings and intent of the Everglades and the intent of the EFA.

Impact on the C&SF Project. With respect to water supply, there is a potential for the STAs to have an adverse impact on the C&SF Project. This is due to the need add water during dry periods to avoid re-release of accreted phosphorus. In this case, the STA would be a net user of water and have an impact on the water supply. Due to their size and capacity, however, the ability of the STAs to attenuate peak flow rates and store water for later release could improve current conditions.

Compliance with the EFA. Again, since the EFA includes language regarding STAs, and an STA is included in this treatment train, it would meet the specific policy of the EFA. The total implementation time for the construction of this treatment train can meet the schedule set by the EFA, and it has the ability to achieve an effluent P concentration of 10 ppb.

Compliance with Federal Consent Decree. Since this treatment train includes an STA, it would meet the requirements of the Federal Consent Decree on policy issues. This is because the policy is based upon STAs. By adding the treatment facility to the STA, it has the potential of improving the water quality above the phosphorus limits and Class III water quality standards set by the federal consent decree.

Table 4.6-2. Predicted Effluent Water Quality For STA - Chemical Treatment/High Rate Settling with Influent P = 150 ppb

Parameter	Units	Influent Concentration[a]	Predicted Effluent Water Quality For Influent/Effluent Levels				
			150/50	150/40	150/30	150/20	150/10
Nutrients:							
Total phosphorus	ug/L	150	50	40	30	20	
Ammonia nitrogen	ug/L	440	51	51	51	51	
Total Kjeldahl nitrogen	ug/L	2700	2100	1802	1492	1169	
Nitrate nitrogen	ug/L	450	35	35	35	35	
Nitrite nitrogen	ug/L	70	1	1	1	1	
Total nitrogen	ug/L	3220	2136	1838	1528	1205	
Metals:							
Aluminum	ug/L	297	20	18	15	13	
Copper[b]							
Iron	ug/L	358	36	658	1307	1981	
Manganese	ug/L	17	27	39	52	65	
Mercury (total)	ug/L	2.2E-03	9.1E-04	7.7E-04	6.2E-04	4.6E-04	
Mercury (methyl)	ug/L	2.0E-04	6.0E-05	5.8E-05	5.6E-05	5.3E-05	
Zinc	ug/L	5	3	3	2	2	
Ions:							
Sulfate	mg/L	64	55	55	55	55	
Silica	mg/L	27	27	26	25	24	
Chloride	mg/L	134	157	165	173	182	
Calcium	mg/L	75	75	77	80	82	
Magnesium	mg/L	24	23	23	23	23	
Sodium	mg/L	90	107	107	107	107	
Potassium	mg/L	7	7	7	7	7	
Others:							
Alkalinity as $CaCO_3$	mg/L	241	246	241	236	230	
pH	s.u.	7	7	7	7	7	
Specific conductance[b]	umho/cm						
Total dissolved solids	mg/L	659	697	707	718	729	
Total organic carbon	mg/L	38	41	37	33	29	

[a] Source: Everglades Nutrient Removal Project 1995 Monitoring Report published by the South Florida Water Management District.
P concentrations are influent/effluent concentrations evaluated in this study

[b] Water quality analysis for this parameter in progress at time of final report production

Table 4.6-3. Predicted Effluent Water Quality For STA - Chemical Treatment/High Rate Settling with Influent P = 90 ppb

Parameter	Unit	Influent Concentration[a]	Predicted Effluent Water Quality For Influent/Effluent Levels				
			90/50	90/40	90/30	90/20	90/10
Nutrients:							
Total phosphorus	ug/L	90	50	40	30	20	
Ammonia nitrogen	ug/L	160	20	20	20	20	
Total Kjeldahl nitrogen	ug/L	2700	2100	1802	1492	1169	
Nitrate nitrogen	ug/L	250	10	10	10	10	
Nitrite nitrogen	ug/L	70	0	0	0	0	
Total nitrogen	ug/L	3020	2110	1812	1502	1179	
Metals:							
Aluminum	ug/L	100	7	9	10	12	
Copper[b]	ug/L						
Iron	ug/L	100	12	640	1293	1973	
Manganese	ug/L	12	20	33	47	62	
Mercury (total)	ug/L	1.8E-03	7.4E-04	6.2E-04	5.0E-04	3.8E-04	
Mercury (methyl)	ug/L	1.6E-04	4.8E-05	4.6E-05	4.5E-05	4.3E-05	
Zinc	ug/L	3	2	2	1	1	
Ions:							
Sulfate	mg/L	73	64	64	64	64	
Silica	mg/L	22	22	21	20	19	
Chloride	mg/L	183	214	222	230	239	
Calcium	mg/L	81	81	83	86	88	
Magnesium	mg/L	26	26	26	26	26	
Sodium	mg/L	119	142	142	142	142	
Potassium	mg/L	10	10	10	10	10	
Others:							
Alkalinity as $CaCO_3$	mg/L	275	281	276	271	265	
pH	s.u.	7	7	7	7	7	
Specific conductance[b]	umho/cm						
Total dissolved solids	mg/L	720	763	773	784	795	
Total organic carbon	mg/L	40	43	39	35	30	

[a] Source: Unpublished water quality data (except P concentrations) for period August 1994 - August 1995 at sample station G252C, South Florida Water Management District.

[b] Water quality analysis for this parameter in progress at time of final report production

Table 4.6-4. Effect of STA - High-Rate Settling on Water Quality

Parameter	Unit	Concentration change caused by treatment	Ratio of effluent concentration to concentration in EAA raw water
Nutrients:			
Total phosphorus	ug/L	-138	0.080
Ammonia nitrogen	ug/L	-389	0.116
Total Kjeldahl nitrogen	ug/L	-1,773	0.343
Nitrate nitrogen	ug/L	-415	0.078
Nitrite nitrogen	ug/L	-69	0.014
Total nitrogen	ug/L	-2,257	0.299
Metals:			
Aluminum	ug/L	-286	0.037
Copper[a]	ug/L		
Iron	ug/L	2,129	6.947
Manganese	ug/L	58	4.431
Mercury (total)	ug/L	-1.9E-03	0.158
Mercury (methyl)	ug/L	-1.5E-04	0.259
Zinc	ug/L	-3	0.389
Ions:			
Sulfate	mg/L	-8	0.873
Silica	mg/L	-4	0.852
Chloride	mg/L	54	1.400
Calcium	mg/L	9	1.125
Magnesium	mg/L	0	1.000
Sodium	mg/L	17	1.189
Potassium	mg/L	0	1.000
Others:			
Alkalinity as $CaCO_3$	mg/L	-15	0.938
pH	s.u.	-0.29	0.960
Specific conductance	umho/cm		
Total dissolved solids	mg/L	78	1.118
Total organic carbon	mg/L	-12	0.684

[a] Water quality analysis for this parameter in progress at time of final report production

RESEARCH PRIORITIES

Performance of the STAs in treating runoff form the EAA is by far the most documented of any of the treatment technologies being investigated in this evaluation. Ongoing research activities in the ENR will continue over the next several years to advance the knowledge needed for more efficient and effective designs. Specifically, relationships between P removal and loading rate, detention time, and operating water depth should be refined.

With respect to the chemical treatment/high-rate settling portion of the treatment train, this investigation has identified tasks that should be undertaken prior to implementation of full-scale systems.

1. Evaluate the effects of the following parameters on quality of settler effluent and the concentration of the settled solids:

   A. Processing rate (gpm/sq ft)
   B. Iron dose.
   C. Polymer dose
   D. pH
   E. Sludge recycle rate

2. Evaluate and document the effectiveness of chemical treatment on mercury and methyl mercury removal.

4.7 CHEMICAL TREATMENT/DISSOLVED AIR FLOTATION

SECTION 4.7

CHEMICAL TREATMENT/DISSOLVED AIR FLOTATION/FILTRATION

DESCRIPTION

Following chemical treatment using alum or iron salts to precipitate phosphorus, dissolved air flotation (DAF) is applied to achieve solids-liquid separation of the chemical precipitates and other solids. DAF floats suspended solids by attaching air bubbles to them, thereby decreasing the apparent density of the solid particles. The process involves saturating recycled effluent with air at a pressure of 25 to 70 lb/sq.in. The recycle is held at this pressure for 0.3 to 3.0 minutes in a retention tank and then the pressure is released as the recycle mixes with the feed stream in the flotation chamber. The sudden reduction in pressure results in the release of microscopic air bubbles which attach themselves to the suspended particles in the wastewater. The resulting solid/air agglomerates have vertical rise rates of about 0.5 to 2.0 ft/min, much greater than the settling rates of solid particles alone. The floated materials rise to the surface to form a froth layer. The attraction between the air bubbles and particles is primarily a result of the particle surface charge and bubble size distribution.

A proprietary DAF process that combines flocculation, flotation, and filtration in a single tank has been reported to achieve effective solids-liquid separation. This process is called chemical treatment/DAF/filtration hereafter. The influent is mixed with a coagulant, then gently agitated in the flocculation zone in the center of the tank. Each unit can be hydraulically loaded up to 4.9 gpm/sq.ft. The flocculated solids pass through the upper outlet of the flocculator and are mixed with recirculated flow (about 15 to 25 percent) containing very fine air bubbles generated by mixing the water and air under pressure, followed by rapid decompression under high shear conditions. The air bubbles attach to the solids and agglomerates formed rise rapidly to the tank surface. The accumulated floated and thickened sludge with solids concentration of 2 to 3 percent is removed by a scoop, pumped to a sludge storage tank, then applied on dedicated land. The clarified underflow is filtered through layers of anthracite and fine sand which effectively removes particles of 1 micron or larger. Spent backwash from the filter is recycled and combined with the untreated water at the flocculator inlet thus eliminating the need for separate storage and disposal of backwash. Figure 4.7 is a schematic drawing of the treatment train.

This system appears to have advantages for the Everglades project. Conventional filters may clog rapidly because of the high solids loading due to native solids and chemical floc. The unit described above removes the bulk of the solids by flotation, reducing the solids loading on the filters. Additionally, flotation may more effectively remove algae than conventional gravity settling or filtration systems.

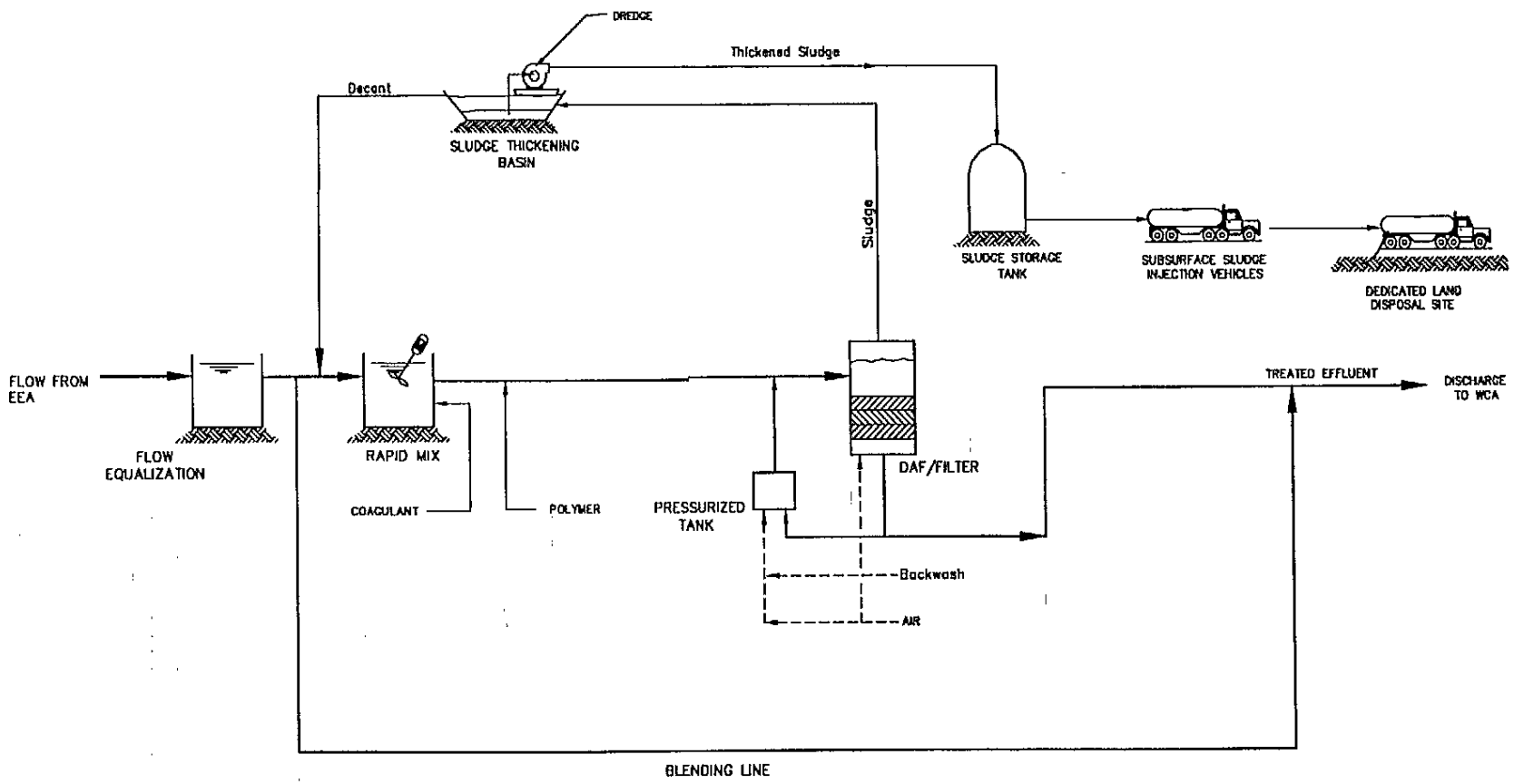

PEER/Brown and Caldwell
Consultants

FIGURE. 4.7
CHEMICAL TREATMENT/
DISSOLVED AIR FLOTATION/
FILTRATION FLOWSHEET

BASIS OF EVALUATION

To size the treatment train, a mass/flow balance model, similar to the one developed for the Amendment 6 work (Contract C-3051) in 1993, was used to size flow equalization basins and determine the necessary capacity of treatment units. Influent P was either 150 ppb or 90 ppb. It was assumed that chemical treatment/DAF/filtration is capable of achieving plant effluent P concentrations of 5 to 10 ppb. Chemical Treatment/Dissolved Air Flotation/Filtration has the capability to produce effluent P concentrations as low as those produced by chemical treatment/direct filtration.

For chemical treatment technologies, it is not always necessary to treat all of the influent flow to satisfy the effluent P objective. To do so would require a very large and expensive plant sized to treat peak flows. A less expensive option involves use of a smaller plant that treats only a portion of the flow during high-flow periods. When flow is below plant capacity, as it would be during dry weather, all of the flow is treated to P levels below the effluent goal. During peak flows, flow above plant capacity is routed around the plant. The bypassed flow and treated flow are then blended and discharged. During peak flows P levels in the blended stream are likely to exceed effluent goals. However, the low P concentrations achieved during low-flow periods offset the higher P concentrations discharged during high-flow periods and the long-term average effluent P concentration satisfies the treatment goal. Use of flow equalization also results in lower overall project costs by dampening out peak influent flows, also reducing the required design capacity of the treatment works.

The mass/flow balance model discussed in Chapter 3, Methodology, was used to estimate the optimum relationship between blending, flow equalization basin volume, and treatment plant design capacity, using minimum present worth cost as the selection criterion. Table 4.7-1 summarizes design data for the Chemical Treatment/Dissolved-Air Flotation treatment train resulting from this optimizatin process.

EAA waters have a substantial coagulant demand due to their high organic carbon concentrations. The Amendment 6 work suggested that an iron dose of about 16 mg/L worked best with EAA waters. The calculations done here are based on an iron dose of 16 mg/l as ferric and 13 mg/L lime (as CaO) for pH control. It is possible that ways to reduce this chemical dose can be determined by pilot work

Rapid mixers were sized to provide detention times of 3 seconds at full capacity. The DAF and filter units were sized for flow rates of 5 gpm/sq ft at full capacity. Sludge thickening ponds were sized to accommodate 6 months of 7 percent sludge to an average depth of 4 feet. To minimize migration of pond water to groundwater, dedicated land sites were sized so that nearly all water in the applied sludge was removed by evaporation.

Table 4.7-1. Basis of Design and Cost Information for Chemical Treatment/Dissolved Air Flotation

Parameter	Influent/Effluent P Levels									
	150/50	150/40	150/30	150/20	150/10	90/50	90/40	90/30	90/20	90/10
Basis of Design										
Influent PS capacity, mgd	2330	2330	2330	2330	2330	2330	2330	2330	2330	2330
Influent PS average flow, mgd	189	189	189	189	189	189	189	189	189	189
STA area, acres	0	0	0	0	0	0	0	0	0	0
FEB area, acres	500	500	1000	1500	2500	200	300	500	800	1500
Treatment plant influent PS capacity, mgd	251	327	360	448	710	127	187	263	370	615
Treatment plant influent PS average flow, mgd	128	143	158	173	189	79	105	130	156	182
Treatment plant land area, acres	27	30	33	36	40	17	22	27	33	38
Sludge disposal area, acres	269	300	332	363	397	166	221	273	328	382
Effluent PS capacity, mgd	2330	2330	2330	2330	2330	2330	2330	2330	2330	2330
Effluent PS average flow, mgd	189	189	189	189	189	189	189	189	189	189
Total land area, acres	875	913	1,501	2,090	3,230	421	597	880	1,276	2,112
Capital Costs, $ million										
Influent pumping station	17.87	17.87	17.87	17.87	17.87	17.87	17.87	17.87	17.87	17.87
STA	0.00	0.00	0.00	0.00	0.00	0.00	0.00	0.00	0.00	0.00
STA seepage pump station	0.00	0.00	0.00	0.00	0.00	0.00	0.00	0.00	0.00	0.00
FEB	4.13	4.13	8.25	12.38	20.63	1.65	2.48	4.13	6.60	12.38
FEB seepage pump station	0.11	0.11	0.21	0.32	0.53	0.04	0.06	0.11	0.17	0.32
Treatment plant influent pump station	2.41	3.14	3.45	4.30	6.81	1.22	1.79	2.52	3.55	5.90
Treatment plant	33.05	40.94	44.37	53.50	80.70	20.18	26.41	34.30	45.41	70.84
Sludge treatment and disposal	2.56	2.86	3.16	3.46	3.78	1.58	2.10	2.60	3.12	3.64
Effluent pump station	17.87	17.87	17.87	17.87	17.87	17.87	17.87	17.87	17.87	17.87
Subtotal	77.99	86.91	95.18	109.69	148.18	60.42	68.58	79.39	94.59	128.81
Construction contingencies (20 percent)	15.60	17.38	19.04	21.94	29.64	12.08	13.72	15.88	18.92	25.76
Subtotal, construction costs	93.59	104.29	114.22	131.63	177.82	72.50	82.30	95.27	113.50	154.57
Engineering (15 percent)	14.04	15.64	17.13	19.74	26.67	10.87	12.35	14.29	17.03	23.19
Land purchase - STA	0.00	0.00	0.00	0.00	0.00	0.00	0.00	0.00	0.00	0.00
Land purchase - FEB	1.93	1.93	3.85	5.78	9.63	0.77	1.16	1.93	3.08	5.78
Land purchase - treatment plant	0.10	0.12	0.13	0.14	0.15	0.06	0.08	0.11	0.13	0.15
Land purchase - sludge disposal	1.03	1.16	1.28	1.40	1.53	0.64	0.85	1.05	1.26	1.47
Total Capital Cost	110.69	123.13	136.61	158.69	215.80	84.85	96.74	112.65	135.00	185.15
Present Worth - Capital Cost	110.69	123.13	136.61	158.69	215.80	84.85	96.74	112.65	135.00	185.15
O&M Costs, $ million/yr										
Influent pumping station	0.52	0.52	0.52	0.52	0.52	0.52	0.52	0.52	0.52	0.52
STA	0.00	0.00	0.00	0.00	0.00	0.00	0.00	0.00	0.00	0.00
STA seepage pump station	0.00	0.00	0.00	0.00	0.00	0.00	0.00	0.00	0.00	0.00
STA sampling and monitoring	0.00	0.00	0.00	0.00	0.00	0.00	0.00	0.00	0.00	0.00
FEB	0.03	0.03	0.06	0.09	0.15	0.01	0.02	0.03	0.05	0.09
FEB seepage pump station	0.02	0.02	0.03	0.05	0.07	0.01	0.02	0.02	0.03	0.05
Treatment plant influent pump station	0.39	0.40	0.42	0.44	0.47	0.31	0.35	0.38	0.42	0.46
Chemicals	2.23	2.49	2.75	3.01	3.29	1.37	1.83	2.26	2.71	3.17
Sludge treatment and disposal	0.15	0.17	0.18	0.20	0.22	0.09	0.12	0.15	0.18	0.21
Other treatment plant O&M	1.41	1.57	1.74	1.90	2.08	0.87	1.16	1.43	1.72	2.00
Treatment plant sampling and monitoring	0.30	0.30	0.30	0.30	0.30	0.30	0.30	0.30	0.30	0.30
Effluent pump station	0.52	0.52	0.52	0.52	0.52	0.52	0.52	0.52	0.52	0.52
Total Annual O&M Cost	5.56	6.03	6.53	7.04	7.82	4.02	4.83	5.62	6.45	7.32
Present Worth - Annual O&M Cost	119.47	129.44	140.31	151.18	163.62	86.35	103.82	120.80	138.62	157.17
Present Worth - Replacement Costs, $million										
Influent pump station	1.68	1.68	1.68	1.68	1.68	1.68	1.68	1.68	1.68	1.68
STA seepage pump station	0.00	0.00	0.00	0.00	0.00	0.00	0.00	0.00	0.00	0.00
FEB seepage pump station	0.02	0.02	0.04	0.06	0.10	0.01	0.01	0.02	0.03	0.06
Treatment plant influent pump station	0.45	0.59	0.65	0.81	1.28	0.23	0.34	0.47	0.67	1.11
Chemical feed system	0.48	0.60	0.65	0.78	1.18	0.30	0.39	0.50	0.66	1.04
Other major treatment plant equipment	5.49	6.80	7.37	8.89	13.41	3.35	4.39	5.70	7.55	11.77
Sludge treatment and disposal	0.43	0.48	0.53	0.57	0.63	0.26	0.35	0.43	0.52	0.60
Effluent pump station	1.68	1.68	1.68	1.68	1.68	1.68	1.68	1.68	1.68	1.68
Total Present Worth - Replacement Costs	10.23	11.84	12.59	14.47	19.95	7.50	8.82	10.48	12.78	17.93
Salvage Value, $ million										
Influent pump station demolition cost	(3.57)	(3.57)	(3.57)	(3.57)	(3.57)	(3.57)	(3.57)	(3.57)	(3.57)	(3.57)
STA seepage pump station demolition cost	0.00	0.00	0.00	0.00	0.00	0.00	0.00	0.00	0.00	0.00
FEB seepage pump station demolition cost	(0.02)	(0.02)	(0.04)	(0.06)	(0.11)	(0.01)	(0.01)	(0.02)	(0.03)	(0.06)
Treatment plant influent pump station demolition cost	(0.48)	(0.63)	(0.69)	(0.86)	(1.36)	(0.24)	(0.36)	(0.50)	(0.71)	(1.18)
Treatment plant demolition cost	(6.61)	(8.19)	(8.87)	(10.70)	(16.14)	(4.04)	(5.28)	(6.86)	(9.08)	(14.17)
Effluent pump station demolition cost	(3.57)	(3.57)	(3.57)	(3.57)	(3.57)	(3.57)	(3.57)	(3.57)	(3.57)	(3.57)
STA restoration cost	0.00	0.00	0.00	0.00	0.00	0.00	0.00	0.00	0.00	0.00
FEB restoration cost	(1.41)	(1.41)	(2.00)	(2.45)	(3.16)	(0.89)	(1.10)	(1.41)	(1.79)	(2.45)
Sludge land restoration cost	0.00	0.00	0.00	0.00	0.00	0.00	0.00	0.00	0.00	0.00
STA land value	0.00	0.00	0.00	0.00	0.00	0.00	0.00	0.00	0.00	0.00
FEB land value	1.93	1.93	3.85	5.78	9.63	0.77	1.16	1.93	3.08	5.78
Treatment plant land value	0.10	0.12	0.13	0.14	0.15	0.06	0.08	0.11	0.13	0.15
Sludge land value	0.00	0.00	0.00	0.00	0.00	0.00	0.00	0.00	0.00	0.00
Net Salvage Value	(13.65)	(15.36)	(14.78)	(15.31)	(18.14)	(11.50)	(12.66)	(13.92)	(15.56)	(19.09)
Present Worth - Salvage Value	(1.92)	(2.16)	(2.08)	(2.15)	(2.55)	(1.62)	(1.78)	(1.96)	(2.19)	(2.69)
50 - Year Present Worth, $ million										
Capital Cost	110.69	123.13	136.61	158.69	215.80	84.85	96.74	112.65	135.00	185.15
O&M Cost	119.47	129.44	140.31	151.18	163.62	86.35	103.82	120.80	138.62	157.17
Replacement Cost	10.23	11.84	12.59	14.47	19.95	7.50	8.82	10.48	12.78	17.93
Salvage Value	1.92	2.16	2.08	2.15	2.55	1.62	1.78	1.96	2.19	2.69
Total	242.31	266.58	291.59	326.49	401.92	180.31	211.16	245.88	288.59	362.93
Present worth, $/million gallons treated	70.25	77.29	84.54	94.66	116.52	52.28	61.22	71.29	83.67	105.22
Present worth, $/pound P removed	84.23	84.24	84.47	87.31	99.80	156.70	146.81	142.46	143.31	157.71

ECONOMIC ANALYSIS

Economic analysis of the treatment trains involved sizing of individual process units and preparing estimates of capital costs, O&M costs, and 50-year present worth. The following paragraphs summarize the results of the cost analysis. Table 4.7-1 provides a cost summary for the Dissolved-Air Flotation treatment train at the various P removal scenarios.

Capital Costs

Capital cost estimates were generated for ten scenarios involving two levels of influent P and five levels of effluent P. The costs ranged from about $85 million to about $216 million.

O&M Costs

O&M cost estimates were generated for ten scenarios involving two levels of influent P and five levels of effluent P. The costs ranged from about $4.0 million to about $8 million annually. Present worth values for the O&M costs ranged from about $86 million to about $164 million.

Replacement Costs

Present worth replacement cost estimates were generated for the ten scenarios involving two levels of influent P and five levels of effluent P. The costs ranged from about $8 million to about $20 million.

Salvage Value

Salvage values were calculated by subtracting the cost to restore the land from the value of the land. The costs to restore the land included costs to demolish the influent, seepage, and effluent pumping stations; the cost to demolish the treatment plant; and the cost associated with restoration of the land. In all cases, demolition and land restoration costs exeeded land value at the end of 50 years. The net salvage cost ranged from about $12 million to about $19 million. The present worth of the net salvage cost ranged from about $2 million to about $3 million.

Present Worth

Estimates of total 50-year present worth for the chemical treatment/DAF/filtration treatment train range from about $180 million to about $402 million. This equates to ranges of about $52 to

$117 per million gallons of water treated and about $84 to $158 per pound of P removed over the 50-year period.

NON-ECONOMIC ANALYSIS

The following section reviews the analysis that was conducted for the non-economic criteria. These criteria include water quality and other non-economic issues, such as robustness, hydropattern restoration, byproduct generation, permittability, impact to the C&SF project, compliance with the EFA, and compliance with the federal consent decree.

Water Quality Analysis

A conceptual level finished water quality characterization for the chemical treatment/dissolved air flotation/filtration treatment train was completed as part of this investigation. Water quality parameters included nutrients (phosphorus and nitrogen), metals, and others (e.g., alkalinity, total dissolved solids, (TDS) and total organic carbon (TOC). The evaluation was performed for these parameters for each treatment train for two levels of influent quality (150 ppb and 90 ppb) and five levels of effluent quality, as characterized by P concentration. Influent composition is described below:

1. Influent P = 150 ppb. The concentrations of all parameters were assumed to be similar to the 1995 average concentrations in inflow to the ENR Project as summarized in the Everglades Nutrient Removal Project 1995 Monitoring Report (South Florida Water Management District, 1996). For consistency with other work in this report, influent TP was set to 150 ppb, an approximate 10 percent variance from the reported data.

2. Influent P = 90 ppb. The concentrations of all parameters were assumed to be similar to the average concentrations measured in the August 1994-August 1995 grab samples at Sampling Station G252C, which is located immediately after the buffer zone in Cell 1 of the ENR Project (South Florida Water Management District, undated). This assumed composition of 90 ppb P influent is speculative because it is based on grab samples within ENR only and may not be representative of EAA runoff following full implementation of BMPs.

Effluent concetrations were calculated for all parameters for systems designed to reduce P to the range of 10 to 50 ppb.

Calculation Procedure. Concentrations of parameters in the chemical treatment/DAF/filtration plant effluent (prior to blending) were estimated using the following sequence of calculations:

A. Soluble and particulate fractions for each parameter were estimated for the raw water, using ENR Project data, data from Amendment 6 bench tests, and information from the literature. Using total P at 150 ppb, for example, with dissolved P being 70 percent of total P, raw water dissolved P is then 105 ppb and particulate P is 45 ppb.

B. FEB effluent concentrations were estimated by assuming no removal of dissolved materials through the FEB and 33 percent removal of particulate material. Continuing with the example, FEB effluent dissolved P = 105 ppb, FEB effluent particulate P = 30 ppb [(1-0.33)45], and FEB effluent P = 135 ppb.

C. A fixed dose of ferric chloride (16 mg/L as Fe) was applied to the treatment plant influent. A fixed lime dose (13 mg/L as CaO) was also applied to maintain the reaction at pH 7.0. Good results have been obtained at pH 7.0 in Amendment 6 jar tests (Analysis and Development of Chemical Treatment Processes, Contract C-3501, Amendment 6, Technical Memorandum No.1). This dosing regime removes a fraction of dissolved material (the fraction depending on the parameter being considered) and renders the precipitated and other suspended solids suitable for the solids separation step. The example dosing program precipitated 95 percent of the dissolved P, leaving 5 ppb dissolved P and 130 ppb (135 ppb - 5 ppb) particulate P in the water flowing to the solids separator. Note that this dosing regime also increases the concentrations of some components (chloride and some trace elements impurities associated with the chemicals) and that these increases were included in the calculation.

D. The solids separation step then removed solids according to its documented capability. Conservative removal efficiencies were assumed. For example, a solids removal efficiency of 97 percent and no removal of dissolved material were used for DAF/filtration. For this example, filter plant effluent P was 9 ppb [(1-0.97)130+5].

Concentrations of parameters in the <u>treatment train effluent</u> (i.e., after blending treatment plant effluent and bypassed water) were calculated by flow weighting the concentrations of treatment plant effluent and bypassed water. The bypassed water concentration was equal to the FEB effluent concentration. Consider the case in which average treatment plant flow is 143 mgd and average bypassed flow is 46 mgd. Based on the explanations above, plant effluent P is 9 ppb and FEB effluent P is 135 ppb. Therefore the composition of the blended flow is 40 ppb.

Tables 4.7-2 and 4.7-3 show predicted composition of blended effluent for the cases where influent P is 150 and 90 ppb, respectively and effluent P concentrations range from 50 ppb to 10 ppb.

<u>General Effects of Chemical Treatment/DAF/ filtration on Plant Effluent Water Quality.</u> Table 4.7-4 shows changes in water quality caused by chemical treatment/DAF/ filtration. It compares untreated water composition with composition of effluent from the treatment plant for the scenario involving a 150 ppb P concentration in the raw (untreated) water. These changes are based on effluent composition prior to blending. It shows the changes in terms of (1) concentration differences, with negative numbers signifying concentration decreases and positive numbers concentration increases and (2) as the ratio of effluent concentration to influent concentration. Such information is generally useful, since it can be applied (with caution) to EAA waters of somewhat

Table 4.7-2. Predicted Effluent Water Quality For Chemical Treatment/DAF/Filtration with Influent P = 150 ppb

Parameter	Unit	Influent Concentration[a]	Predicted Effluent Water Quality For Influent/Effluent Levels				
			150/50	150/40	150/30	150/20	150/10
Nutrients:							
Total phosphorus	ug/L	150	50	40	30	20	10
Ammonia nitrogen	ug/L	440	440	440	440	440	440
Total Kjeldahl nitrogen	ug/L	2700	1490	1362	1234	1106	970
Nitrate nitrogen	ug/L	450	450	450	450	450	450
Nitrite nitrogen	ug/L	70	70	70	70	70	70
Total nitrogen	ug/L	3220	2010	1882	1754	1626	1490
Metals:							
Aluminum	ug/L	297	98	85	71	57	42
Copper[b]	ug/L						
Iron	ug/L	358	485	509	533	557	582
Manganese	ug/L	17	52	56	61	65	70
Mercury (total)	ug/L	2.2E-03	9.6E-04	8.5E-04	7.4E-04	6.3E-04	5.2E-04
Mercury (methyl)	ug/L	2.0E-04	1.4E-04	1.3E-04	1.3E-04	1.2E-04	1.2E-04
Zinc	ug/L	5	4	3	3	3	3
Ions:							
Sulfate	mg/L	64	63	63	63	63	63
Silica	mg/L	27	24	23	23	22	22
Chloride	mg/L	134	155	157	160	162	165
Calcium	mg/L	75	81	82	83	83	84
Magnesium	mg/L	24	23	23	23	23	23
Sodium	mg/L	90	90	90	90	90	90
Potassium	mg/L	7	7	7	7	7	7
Others:							
Alkalinity as $CaCO_3$	mg/L	241	227	226	224	223	221
pH	s.u.	7	7	7	7	7	7
Specific conductance[b]	umho/cm						
Total dissolved solids	mg/L	659	686	689	692	696	699
Total organic carbon	mg/L	38	27	25	24	23	22

[a] Source: Everglades Nutrient Removal Project 1995 Monitoring Report published by the South Florida Water Management District.
P concentrations are influent/effluent concentrations evaluated in this study

[b] Water quality analysis for this parameter in progress at time of final report production

Table 4.7-3. Predicted Effluent Water Quality For Chemical Treatment/DAF/Filtration with Influent P = 90 ppb

Parameter	Unit	Influent Concentration[a]	Predicted Effluent Water Quality For Influent/Effluent Levels				
			90/50	90/40	90/30	90/20	90/10
Nutrients:							
Total phosphorus	ug/L	90	50	40	30	20	10
Ammonia nitrogen	ug/L	160	160	160	160	160	160
Total Kjeldahl nitrogen	ug/L	2700	1873	1650	1436	1213	990
Nitrate nitrogen	ug/L	250	250	250	250	250	250
Nitrite nitrogen	ug/L	70	70	70	70	70	70
Total nitrogen	ug/L	3020	2193	1970	1756	1533	1310
Metals:							
Aluminum	ug/L	100	103	103	104	105	106
Copper[b]	ug/L						
Iron	ug/L	100	287	355	421	489	558
Manganese	ug/L	12	34	42	50	58	66
Mercury (total)	ug/L	1.8E-03	1.1E-03	9.1E-04	7.6E-04	6.1E-04	4.5E-04
Mercury (methyl)	ug/L	1.6E-04	1.2E-04	1.1E-04	1.1E-04	1.0E-04	9.3E-05
Zinc	ug/L	3	3	2	2	2	2
Ions:							
Sulfate	mg/L	73	73	73	73	73	73
Silica	mg/L	22	20	20	19	18	18
Chloride	mg/L	183	203	210	216	223	230
Calcium	mg/L	81	85	86	87	89	90
Magnesium	mg/L	26	26	26	26	26	26
Sodium	mg/L	119	119	119	119	119	119
Potassium	mg/L	10	10	10	10	10	10
Others:							
Alkalinity as $CaCO_3$	mg/L	275	267	264	261	258	256
pH	s.u.	7	7	7	7	7	7
Specific conductance[b]	umho/cm						
Total dissolved solids	mg/L	720	737	742	747	753	758
Total organic carbon	mg/L	40	35	34	32	30	29

[a] Source: Unpublished water quality data (except P concentrations) for period August 1994 - August 1995 at sample station G252C, South Florida Water Management District.

[b] Water quality analysis for this parameter in progress at time of final report production

Table 4.7-4. Effect of Chemical Treatment/Dissolved-Air Flotation/Filtration on Water Quality

Parameter	Unit	Concentration change caused by treatment	Ratio of effluent concentration to concentration in EAA raw water
Nutrients:			
Total phosphorus	ug/L	-141	0.060
Ammonia nitrogen	ug/L	0	1.000
Total Kjeldahl nitrogen	ug/L	-1,733	0.359
Nitrate nitrogen	ug/L	0	1.000
Nitrite nitrogen	ug/L	0	1.000
Total nitrogen	ug/L	-1,733	0.463
Metals:			
Aluminum	ug/L	255	0.141
Copper[a]	ug/L		
Iron	ug/L	224	1.626
Manganese	ug/L	53	4.102
Mercury (total)	ug/L	-1.7E-03	0.234
Mercury (methyl)	ug/L	-8.1E-05	0.594
Zinc	ug/L	2	0.555
Ions:			
Sulfate	mg/L	0	1.000
Silica	mg/L	-5	0.815
Chloride	mg/L	31	1.231
Calcium	mg/L	9	1.120
Magnesium	mg/L	0	1.000
Sodium	mg/L	0	1.000
Potassium	mg/L	0	1.000
Others:			
Alkalinity as $CaCO_3$	mg/L	-20	0.917
pH	s.u.	0	0.960
Specific conductance[a]	umho/cm		
Total dissolved solids	mg/L	40	1.061
Total organic carbon	mg/L	-16	0.579

[a] Water quality analysis for this parameter in progress at time of final report production

different composition than waters feeding the ENR Project.

Table 4.7-4 shows that chemical treatment/DAF/ filtration can remove high percentages of P, and also reduce TOC significantly, about 40 percent. It can remove moderate amounts of silica (20 percent) while removing metals rather well except for manganese, which is predicted to increase. Addition of ferric chloride causes increased chloride and TDS concentrations (23 and 6 percent, respectively). Calcium is increased by lime addition. Chemical treatment reduces alkalinity slightly (about 10 percent) because more alkalinity is consumed by the hydrolysis of the iron reagent than is supplied by the pH control agent. Experience indicates that chemical systems will have high removals of turbidity and suspended solids.

Chemical addition can increase trace metal concentrations if the reagents contain significant amounts of metals, if they are not effectively precipitated, and/or their chemical reaction products are inefficiently separated by the solids separation devices.

Other Non-Economic Criteria

Robustness. Chemical treatment/DAF/filtration is capable of responding to wide variations in flow and influent characteristics while still achieving P removal objectives. Phosphorus reductions to between 50 and 10 ppb were achieved by varying operating parameters such as chemical feed rate, ratios of treated and untreated flows, and number of treatment units in service. Chemical feed rates can be paced to coincide with changes in plant inflow and phosphorus and total organic carbon concentrations. Additional flexibility in handling flow variations was provided by FEBs located at the headworks. The FEBs served to dampen peak flows.

Hydropattern Restoration. Without a significant retention or storage area associated with this treatment train there will be limited flexibility in controlling the effluent discharges to the water conservation areas, thus impacting the hydropattern of the Everglades. The FEBs can reduce this impact, but the limited size of the FEB may not reduce this impact significantly.

Byproduct Generation. Chemicals required for the treatment trains include iron for precipitation of phosphorus, lime for pH adjustment as necessary, and possibly polymer to enhance coagulation, flocculation, flotation, and filtration. Solids generated by this treatment process require thickening and subsequent disposal in a dedicated land disposal site.

Permittability. Both the EFA and the Federal Consent Decree include language regarding STAs. Therefore, the permittability of any treatment train that does not include an STA could be in doubt based upon legal issues. There are reasonable assurances, however, that this treatment train will meet the effluent P requirements, the water quality objectives established by the EFA and the Federal Consent Decree and the future Phase II threshold P concentrations. This treatment train might not pass the "public interest test" required to obtain federal approvals due to the perception

by the public that a chemical treatment facility would have a negative impact on the natural surroundings of the Everglades and the intent of the EFA.

Impact on the C&SF Project. With respect to water supply, chemical treatment/DAF/ filtration would have little effect on the C&SF Project. The FEB at the beginning of the treatment train provided some storage capacity to attenuate peak flow rates and to store water for later release. The FEBs, however, are relatively small and they would have little effect on the C&SF Project.

Compliance with the EFA. While the EFA specifically includes language regarding STAs, and a STA is not part of this treatment train, chemical treatment/DAF/ filtration does meet the intent of the policy requirements of the EFA. The system can achieve an effluent concentration less than 10 ppb for P. This train should achieve the restoration goals of the ECP.

Compliance with Federal Consent Decree. Chemical treatment/DAF/filtration does not meet the requirements of the Federal Consent Decree in policy issues because the policy is based upon STAs. It could, however, improve upon the phosphorus and Class III water quality limits set by this decree.

RESEARCH PRIORITIES

This investigation has identified some research areas that should be undertaken prior to implementation of full-scale systems. They are:

1. The effects of the following parameters on the quality of DAF effluent and the solids concentration of the floated solids should be investigated:

   A. Processing rate (gpm/sq ft),
   B. Iron dose,
   C. Polymer dose,
   D. pH,
   E. Recycle rate, and
   F. Aeration system pressure and air rate.

2. The effects of the following parameters on filter effluent quality and the rate of headloss buildup should be investigated:

   A. Media design,
   B. Processing rate (gpm/sq ft),
   C. Filter feed quality,
   D. Filtration aids, and
   E. Media cleaning procedures.

3. Particulate P removal efficiencies using plain sedimentation in simulated FEBs needs to be investigated. Parameters such as:

   A. Flow rate,
   B. Water depth, and
   C. Detention time.

4. The effectiveness of chemical treatment on total mercury and methylmercury should be evaluated.

4.8 STA - CHEMICAL TREATMENT/ DISSOLVED AIR FLOTATION

SECTION 4.8

STORMWATER TREATMENT AREA AND CHEMICAL TREATMENT/DISSOLVED AIR FLOTATION/FILTRATION

DESCRIPTION

This treatment train couples biological treatment in a stormwater treatment area (STA) with chemical treatment/dissolved-air flotation/ direct filtration. Figure 4.8 is a schematic drawing of the treatment train.

STAs are large, man-made wetland areas which, for the purposes of this evaluation, have been defined as wetlands constructed on muck soils where emergent vegetation dominates. STAs are designed to remove nutrients from stormwater by retaining the water and exposing it to a set of naturally occurring biological, chemical, and physical processes. In this evaluation, wetland vegetation is assumed to grow naturally over time. Phosphorus is taken up by the vegetation and transferred to the muck soil when the vegetation dies and accumulates there.

The dissolved-air flotation/filtration process train consists of chemical addition, rapid mixing, flocculation, flotation and downflow filtration in a single unit. The influent water is mixed with flocculant and coagulant, then gently agitated in the flocculation zone in the center of the tank. The flocculated solids pass through the upper outlet of the flocculator and are mixed with recirculated flow (about 15 to 25 percent) containing very fine air bubbles generated by mixing the water air under pressure, then release of the pressure. The air bubbles attach themselves to the solids. The air/solids agglomerates rise rapidly to the tank surface. The accumulated floated and thickened sludge with solids concentration of 2-3 percent is removed by a scoop. The clarified water is filtered through 22 inches of anthracite and fine sand which effectively removes particles of 1 micron or larger. Floated sludge is routed to settling ponds. Pond supernatant is returned to the head of the plant. Solids are removed from the settling ponds during dry periods and applied on dedicated land. Sections 4.1 and 4.7 provide greater detail about STAs and DAF/Filtration.

BASIS OF EVALUATION

In the evaluation of this treatment train, the STA was sized to achieve an effluent P concentration of 50 ppb. A set of model equations, presented in an August 1995 paper authored by Dr. William J. Walker, Jr. entitled "Design Basis for Everglades Stormwater Treatment Areas," were used to estimate the STA area needed to attain 50 ppb. Treatment plant capacities needed to attain effluent goals were estimated by the mass/flow balance model developed for this project.

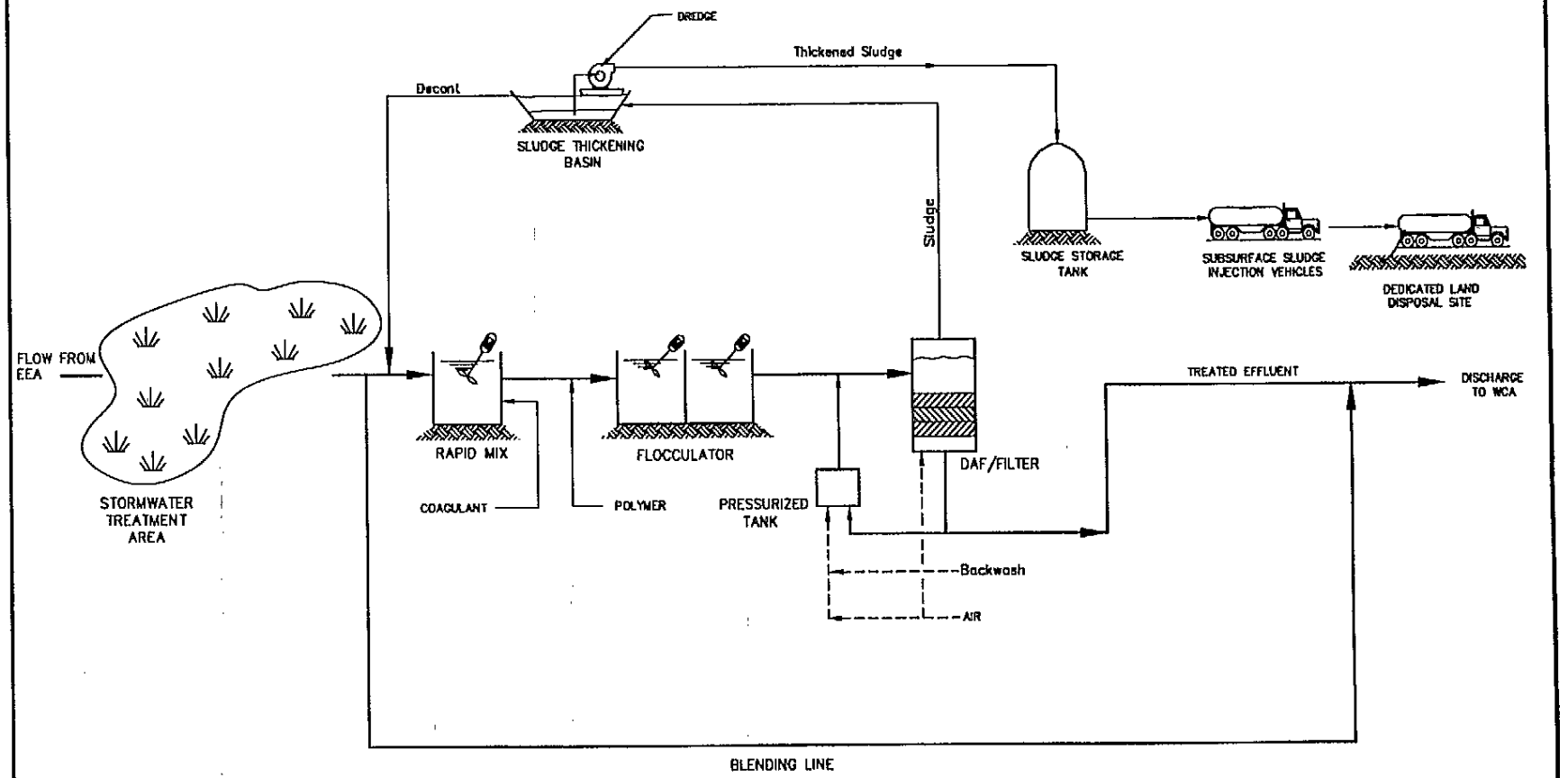

FIGURE. 4.8
STA – CHEMICAL TREATMENT/
DISSOLVED AIR FLOTATION/
FILTRATION FLOWSHEET

PEER/Brown and Caldwell
Consultants

The DAF/filtration units are sized for flow rates of 5 gpm/sq ft when the treatment plant is operating at full capacity. Sludge thickening ponds are sized to accumulate 6 months of 7 percent sludge to an average depth of 4 feet. Dedicated land disposal sites are sized so that nearly all water in the applied sludge could be removed by evaporation during the dry season. The basis of design section of Table 4.8-1 presents the STA sizes and treatment plant capacities used in this evaluation.

ECONOMIC ANALYSIS

Economic analysis of the treatment train involved sizing of individual process units and preparing estimates of capital costs, O&M costs, replacement costs, salvage value, and present worth. Table 4.8-1 summarizes costs for this treatment train.

Capital Costs

Capital cost estimates were completed for ten scenarios involving two levels of influent phosphorus and five levels of effluent phosphorus. The costs ranged from about $91 million to $198 million.

O&M Costs

O&M cost estimates were generated for ten scenarios involving two levels of influent phosphorus and five levels of effluent phosphorus. The costs ranged from about $1.5 million to $7.6 million annually. Present work values for the O&M costs range from about $33 million to about $164 million.

Replacement Costs

Present worth replacement cost estimates were generated for the ten scenarios involving two levels of influent P and five levels of effluent P. They range from about $3.4 million to about $14 million.

Table 4.8-1. Basis of Design and Cost Information for STA - Chemical Treatment/Dissolved Air Flotation/Filtration

Parameter	Influent/Effluent P Levels									
	150/50	150/40	150/30	150/20	150/10	90/50	90/40	90/30	90/20	90/10
Basis of Design										
Influent PS capacity, mgd	2330	2330	2330	2330	2330	2330	2330	2330	2330	2330
Influent PS average flow, mgd	189	189	189	189	189	189	189	189	189	189
STA area, acres	7410	7410	7410	7410	7410	4040	4040	4040	4040	4040
FEB area, acres	0	0	0	0	0	0	0	0	0	0
Treatment plant influent PS capacity, mgd	0	42	89	155	360	0	43	95	181	420
Treatment plant influent PS average flow, mgd	0	42	83	128	176	0	42	86	130	174
Treatment plant land area, acres	0	9	17	27	37	0	9	18	27	37
Sludge disposal area, acres	0	88	174	269	370	0	88	181	273	365
Effluent PS capacity, mgd	2330	2330	2330	2330	2330	2330	2330	2330	2330	2330
Effluent PS average flow, mgd	189	189	189	189	189	189	189	189	189	189
Total land area, acres	8,151	8,258	8,362	8,476	8,598	4,444	4,551	4,663	4,774	4,886
Capital Costs, $ million										
Influent pumping station	17.87	17.87	17.87	17.87	17.87	17.87	17.87	17.87	17.87	17.87
STA	33.96	33.96	33.96	33.96	33.96	18.52	18.52	18.52	18.52	18.52
STA seepage pump station	0.78	0.78	0.78	0.78	0.78	0.43	0.43	0.43	0.43	0.43
FEB	0.00	0.00	0.00	0.00	0.00	0.00	0.00	0.00	0.00	0.00
FEB seepage pump station	0.00	0.00	0.00	0.00	0.00	0.00	0.00	0.00	0.00	0.00
Treatment plant influent pump station	0.00	0.40	0.85	1.49	3.45	0.00	0.41	0.91	1.74	4.03
Treatment plant	0.00	11.36	16.24	23.09	44.37	0.00	11.46	16.86	25.79	50.60
Sludge treatment and disposal	0.00	0.84	1.66	2.56	3.52	0.00	0.84	1.72	2.60	3.48
Effluent pump station	17.87	17.87	17.87	17.87	17.87	17.87	17.87	17.87	17.87	17.87
Subtotal	70.49	83.09	89.24	97.62	121.83	54.68	67.40	74.18	84.81	112.79
Construction contingencies (20 percent)	14.10	16.62	17.85	19.52	24.37	10.94	13.48	14.84	16.96	22.56
Subtotal, construction costs	84.58	99.71	107.09	117.15	146.19	65.62	80.88	89.01	101.77	135.35
Engineering (15 percent)	12.69	14.96	16.06	17.57	21.93	9.84	12.13	13.35	15.27	20.30
Land purchase - STA	28.53	28.53	28.53	28.53	28.53	15.55	15.55	15.55	15.55	15.55
Land purchase - FEB	0.00	0.00	0.00	0.00	0.00	0.00	0.00	0.00	0.00	0.00
Land purchase - treatment plant	0.00	0.03	0.07	0.10	0.14	0.00	0.03	0.07	0.11	0.14
Land purchase - sludge disposal	0.00	0.34	0.67	1.03	1.42	0.00	0.34	0.70	1.05	1.41
Total Capital Cost	125.80	143.56	152.41	164.38	198.21	91.02	108.94	118.68	133.75	172.75
Present Worth - Capital Cost	125.80	143.56	152.41	164.38	198.21	91.02	108.94	118.68	133.75	172.75
O&M Costs, $ million/yr										
Influent pumping station	0.52	0.52	0.52	0.52	0.52	0.52	0.52	0.52	0.52	0.52
STA	0.22	0.22	0.22	0.22	0.22	0.12	0.12	0.12	0.12	0.12
STA seepage pump station	0.12	0.12	0.12	0.12	0.12	0.07	0.07	0.07	0.07	0.07
STA sampling and monitoring	0.30	0.30	0.30	0.30	0.30	0.30	0.30	0.30	0.30	0.30
FEB	0.00	0.00	0.00	0.00	0.00	0.00	0.00	0.00	0.00	0.00
FEB seepage pump station	0.00	0.00	0.00	0.00	0.00	0.00	0.00	0.00	0.00	0.00
Treatment plant influent pump station	0.00	0.26	0.32	0.38	0.45	0.00	0.26	0.32	0.38	0.44
Chemicals	0.00	0.73	1.44	2.23	3.06	0.00	0.73	1.50	2.26	3.03
Sludge treatment and disposal	0.00	0.05	0.10	0.15	0.20	0.00	0.05	0.10	0.15	0.20
Other treatment plant O&M	0.00	0.46	0.91	1.41	1.94	0.00	0.46	0.95	1.43	1.91
Treatment plant sampling and monitoring	0.00	0.30	0.30	0.30	0.30	0.00	0.30	0.30	0.30	0.30
Effluent pump station	0.52	0.52	0.52	0.52	0.52	0.52	0.52	0.52	0.52	0.52
Total Annual O&M Cost	1.69	3.49	4.76	6.16	7.64	1.54	3.34	4.70	6.06	7.43
Present Worth - Annual O&M Cost	36.40	75.06	102.32	132.24	164.16	33.11	71.78	101.03	130.29	159.54
Present Worth - Replacement Costs, $million										
Influent pump station	1.68	1.68	1.68	1.68	1.68	1.68	1.68	1.68	1.68	1.68
STA seepage pump station	0.15	0.15	0.15	0.15	0.15	0.08	0.08	0.08	0.08	0.08
FEB seepage pump station	0.00	0.00	0.00	0.00	0.00	0.00	0.00	0.00	0.00	0.00
Treatment plant influent pump station	0.00	0.08	0.16	0.28	0.65	0.00	0.08	0.17	0.33	0.76
Chemical feed system	0.00	0.17	0.24	0.34	0.65	0.00	0.17	0.25	0.38	0.74
Other major treatment plant equipment	0.00	1.89	2.70	3.84	7.37	0.00	1.90	2.80	4.29	8.41
Sludge treatment and disposal	0.00	0.14	0.28	0.43	0.58	0.00	0.14	0.29	0.43	0.58
Effluent pump station	1.68	1.68	1.68	1.68	1.68	1.68	1.68	1.68	1.68	1.68
Total Present Worth - Replacement Costs	3.50	5.77	6.87	8.38	12.75	3.43	5.72	6.94	8.85	13.91
Salvage Value, $ million										
Influent pump station demolition cost	(3.57)	(3.57)	(3.57)	(3.57)	(3.57)	(3.57)	(3.57)	(3.57)	(3.57)	(3.57)
STA seepage pump station demolition cost	(0.16)	(0.16)	(0.16)	(0.16)	(0.16)	(0.09)	(0.09)	(0.09)	(0.09)	(0.09)
FEB seepage pump station demolition cost	0.00	0.00	0.00	0.00	0.00	0.00	0.00	0.00	0.00	0.00
Treatment plant influent pump station demolition cost	0.00	(0.08)	(0.17)	(0.30)	(0.69)	0.00	(0.08)	(0.18)	(0.35)	(0.81)
Treatment plant demolition cost	0.00	(2.27)	(3.25)	(4.62)	(8.87)	0.00	(2.29)	(3.37)	(5.16)	(10.12)
Effluent pump station demolition cost	(3.57)	(3.57)	(3.57)	(3.57)	(3.57)	(3.57)	(3.57)	(3.57)	(3.57)	(3.57)
STA restoration cost	(4.08)	(4.08)	(4.08)	(4.08)	(4.08)	(3.01)	(3.01)	(3.01)	(3.01)	(3.01)
FEB restoration cost	0.00	0.00	0.00	0.00	0.00	0.00	0.00	0.00	0.00	0.00
Sludge land restoration cost	0.00	0.00	0.00	0.00	0.00	0.00	0.00	0.00	0.00	0.00
STA land value	28.53	28.53	28.53	28.53	28.53	15.55	15.55	15.55	15.55	15.55
FEB land value	0.00	0.00	0.00	0.00	0.00	0.00	0.00	0.00	0.00	0.00
Treatment plant land value	0.00	0.03	0.07	0.10	0.14	0.00	0.03	0.07	0.11	0.14
Sludge land value	0.00	0.00	0.00	0.00	0.00	0.00	0.00	0.00	0.00	0.00
Net Salvage Value	17.14	14.82	13.79	12.33	7.72	5.31	2.96	1.82	(0.09)	(5.48)
Present Worth - Salvage Value	2.41	2.09	1.94	1.73	1.09	0.75	0.42	0.26	(0.01)	(0.77)
50 - Year Present Worth, $ million										
Capital Cost	125.80	143.56	152.41	164.38	198.21	91.02	108.94	118.68	133.75	172.75
O&M Cost	36.40	75.06	102.32	132.24	164.16	33.11	71.78	101.03	130.29	159.54
Replacement Cost	3.50	5.77	6.87	8.38	12.75	3.43	5.72	6.94	8.85	13.91
Salvage Value	(2.41)	(2.09)	(1.94)	(1.73)	(1.09)	(0.75)	(0.42)	(0.26)	0.01	0.77
Total	163.28	222.31	259.67	303.27	374.04	126.81	186.02	226.39	272.90	346.97
Present worth, $/million gallons treated	47.34	64.45	75.28	87.92	108.44	36.77	53.93	65.64	79.12	100.59
Present worth, $/pound P removed	56.76	70.25	75.22	81.10	92.87	110.21	129.33	131.17	135.52	150.77

Salvage Value

Salvage values were calculated by subtracting the cost to restore the land from the value of the land. The cost to restore the land included cost to demolish the influent, seepage, and effluent pumping stations, the cost to demolish the treatment plant, and the cost associated with restoration of the land. At the 90/20 and 90/10 P reduction scenarios, the cost of demolition and restoration exceeds the value of the land restored so the net salvage value is negative. At all of the other P reduction scenarios, restored land value exceed the cost of demolition and restoration and net salvage value is positive. In terms of 50-year present worth, however, salvage value has little significance for the STA-Chemical Treatment/DAF/Filtration technology.

Present Worth Costs

Present worth estimates were made using the procedure described in the body of this report. They were made for the ten scenarios involving two levels of influent phosphorus and five levels of effluent phosphorus. They range from about $127 million to $374 million. This equates to about $36 to $100 per million gallons of water treated and $56 to $151 per pound of phosphorus removed.

NON-ECONOMIC ANALYSIS

The following section summarizes the analysis that was conducted for the non-economic criteria. These criteria include water quality and other non-economic issues, such as robustness, hydropattern restoration, byproduct generation, permittability, impact to the C&SF project, compliance with the EFA, and compliance with the Federal Consent Decree.

Water Quality

A conceptual level finished water quality characterization was performed for the STA DAF/filtration treatment train. Water quality parameters to be evaluated were provided by ETAC. The list included nutrients (phosphorus and nitrogen), metals, and others (e. g., alkalinity, total dissolved solids, (TDS) and total organic carbon (TOC). Methyl mercury was specifically included in the water quality evaluation because of its importance as a constituent of concern in South Florida. The evaluation was performed for these parameters for each treatment train for two levels of influent quality (150 ppb and 90 ppb total P) and several levels of effluent quality, ranging from 50 ppb to 10 ppb total P.

Influent composition used was as follows:

1. Influent P = 150 ppb. The concentrations of other parameters were similar to the 1995 average concentrations in inflow to the ENR Project as summarized in the Everglades Nutrient Removal Project 1995 Monitoring Report (South Florida Water Management District, 1996).

2. Influent P = 90 ppb. The concentrations of other parameters were similar to the average concentrations measured in the August 1994-August 1995 grab samples at Sampling Station G252C, which is located immediately after the buffer zone in Cell 1 of the ENR (South Florida Water Management District, undated). This assumed composition of 90 ppb P influent is speculative because it is based on grab samples within ENR only and may not be representative of EAA runoff following full implementation of BMPs.

Effluent concentrations were estimated for all parameters for systems designed to reduce P to the range of 10 to 50 ppb.

Calculation Procedures. The calculations to predict treatment train effluent quality were accomplished as follows:

1. Concentration of P in the wetlands effluent was set at 50 ppb, and the wetlands was sized to achieve that goal using the Walker equation. Using an example of an STA reducing the P concentration from 150 to 50 ppb, the Walker equation predicts a 7410-acre wetland is needed. The concentrations of non-P parameters were estimated by applying the ratio "ENR effluent concentration/ENR influent concentration" (as determined by 1995 ENR operations) to the anticipated influent composition. Using aluminum as another example, applying the ENR Project concentration ratio described above (0.067) to the anticipated STA influent aluminum concentration (297 ppb) gives an STA effluent aluminum concentration of 20 ppb.

2. Concentrations of parameters in the STA-Chemical Treatment/DAF/Filtration (prior to blending) were estimated using the following sequence of calculations:

   A. Soluble and particulate fractions for each parameter were estimated for the STA effluent using ENR data. Using total P at 50 ppb as an example, and with dissolved P being 62 percent of total P, raw water dissolved P is 31 ppb and particulate P is 19 ppb.

   B. A fixed dose of ferric chloride (16 mg/L as Fe) was applied to treatment plant influent. A fixed lime dose (13 mg/L as CaO) was also applied to control the reaction pH at 7.0. Good results had been obtained at pH 7.0 in Amendment 6 jar tests (Analysis and Development of Chemical Treatment Processes, Contract C-3501, Amendment 6, Technical Memorandum No.1). This dosing regime removed a fraction of dissolved material (the fraction depending on the parameter being considered) and rendered the precipitated and other suspended solids suitable for the solids separation step. Continuing the example, the dosing program precipitated 84 percent of the dissolved P,

leaving 5 ppb dissolved P and 45 ppb (50 ppb - 5 ppb) particulate P in the water flowing to the solids separator. Note that dosing also increases the concentrations of some components (chloride and some trace elements impurities associated with the chemicals) and these increases were included in the calculation.

C. The solids separation step removed solids according to its documented capability, and conservative efficiencies were assumed. For example, a solids removal efficiency of 97 percent was used for chemical treatment/DAF/filtration. No credit for dissolved P removal was taken. Filter plant effluent P was 6 ppb [(1 - 0.97) 45 + 5].

3. Concentrations of parameters in the treatment train effluent (i.e., after blending treatment plant effluent and bypassed water) were estimated by flow weighting the concentrations of treatment plant effluent and bypassed water. The bypassed water concentration was equal to the STA effluent concentration. Consider the case in which average treatment plant flow is 128 mgd and average bypassed flow is 61 mgd. Based on the explanations above, plant effluent P is 6 ppb and STA effluent P is 50 ppb. Therefore the composition of the blended flow is (128 mgd x 6 ppb + 61 mgd x 50 ppb)/(128 mgd + 61 mgd) = 20 ppb.

Tables 4.8-2 and 4.8-3 summarizes predicted composition of blended effluents for the cases where influent P are 150 and 90 ppb, respectively, and effluent P ranges from 10 to 50 ppb.

General Effects of STA/Chemical Treatment/DAF/Filtration on Plant Effluent Water Quality. Table 4.8-4 shows changes in water quality caused by the STA/chemical treatment/DAF/filtration treatment train that reduces EAA P concentration from 150 ppb to 30 ppb. These changes are based on effluent composition prior to blending. It shows the changes in terms of (1) concentration differences, with negative numbers signifying concentration decreases and positive numbers signifying concentration increases and (2) the ratio of effluent concentration to influent concentration. Such information is generally useful, since it can be applied (with caution) to EAA waters of somewhat different composition than waters feeding the ENR Project.

Table 4.8-4 shows that the treatment train can remove high percentages of P, ammonia, and nitrate. It removes metals rather well, except manganese, which appear to increase. It can be expected to remove about 70 percent and 40 percent of the mercury and methyl mercury, respectively. Sulfate is moderately reduced. Chloride, sodium, and TDS increase moderately, and alkalinity and TOC decrease slightly. This train should have high removals of turbidity and suspended solids.

Table 4.8-2. Predicted Effluent Water Quality For STA - Chemical Treatment/DAF/Filtration with Influent P = 150 ppb

Parameter	Unit	Influent Concentration[a]	Predicted Effluent Water Quality For Influent/Effluent Levels				
			150/50	150/40	150/30	150/20	150/10
Nutrients:							
Total phosphorus	ug/L	150	50	40	31	20	9
Ammonia nitrogen	ug/L	44	51	51	51	51	51
Total Kjeldahl nitrogen	ug/L	2700	2100	1802	1512	1193	853
Nitrate nitrogen	ug/L	45	35	35	35	35	35
Nitrite nitrogen	ug/L	70	1	1	1	1	1
Total nitrogen	ug/L	3220	2136	1838	1548	1229	889
Metals:							
Aluminum	ug/L	297	20	18	15	13	10
Copper[b]	ug/L						
Iron	ug/L	358	36	156	272	400	537
Manganese	ug/L	17	27	37	47	58	70
Mercury (total)	ug/L	2.2E-03	9.1.E-04	7.7.E-04	6.3.E-04	4.8.E-04	3.1.E-04
Mercury (methyl)	ug/L	2.0E-04	6.0.E-05	5.8.E-05	5.6.E-05	5.4.E-05	5.1.E-05
Zinc	ug/L	5	3	3	3	2	2
Ions:							
Sulfate	mg/L	64	55	55	55	55	55
Silica	mg/L	27	27	26	25	24	22
Chloride	mg/L	134	157	164	171	178	186
Calcium	mg/L	75	75	77	79	81	83
Magnesium	mg/L	24	23	23	23	23	23
Sodium	mg/L	90	107	107	107	107	107
Potassium	mg/L	7	7	7	7	7	7
Others:							
Alkalinity as $CaCO_3$	mg/L	241	246	242	237	232	227
pH	s.u.	7	7	7	7	7	7
Specific conductance[b]	umho/cm						
Total dissolved solids	mg/L	659	697	706	715	724	734
Total organic carbon	mg/L	38	41	37	34	29	25

[a] Source: Everglades Nutrient Removal Project 1995 Monitoring Report published by the South Florida Water Management District.
P concentrations are influent/effluent concentrations evaluated in this study

[b] Water quality analysis for this parameter in progress at time of final report production

Table 4.8-3. Predicted Effluent Water Quality For STA - Chemical Treatment/DAF/Filtration with Influent P = 90 ppb

Parameter	Unit	Influent Concentration[a]	Predicted Effluent Water Quality For Influent/Effluent Levels				
			90/50	90/40	90/30	90/20	90/10
Nutrients:							
Total phosphorus	ug/L	90	50	40	30	20	10
Ammonia nitrogen	ug/L	160	20	20	20	20	20
Total Kjeldahl nitrogen	ug/L	2700	2100	1802	1491	1179	867
Nitrate nitrogen	ug/L	250	10	10	10	10	10
Nitrite nitrogen	ug/L	70	0	0	0	0	0
Total nitrogen	ug/L	3020	2110	1812	1501	1189	877
Metals:							
Aluminum	ug/L	100	7	8	10	11	13
Copper[b]	ug/L						
Iron	ug/L	100	12	137	267	398	528
Manganese	ug/L	12	20	31	43	55	67
Mercury (total)	ug/L	1.8E-03	7.4E-04	6.2E-04	5.0E-04	3.8E-04	2.6E-04
Mercury (methyl)	ug/L	1.6E-04	4.8E-05	4.6E-05	4.5E-05	4.3E-05	4.1E-05
Zinc	ug/L	3	2	2	2	1	1
Ions:							
Sulfate	mg/L	73	64	64	64	64	64
Silica	mg/L	22	22	21	20	19	18
Chloride	mg/L	183	214	221	228	235	243
Calcium	mg/L	81	81	83	85	87	89
Magnesium	mg/L	26	26	26	26	26	26
Sodium	mg/L	119	142	142	142	142	142
Potassium	mg/L	10	10	10	10	10	10
Others:							
Alkalinity as $CaCO_3$	mg/L	275	281	277	272	267	263
pH	s.u.	7	7	7	7	7	7
Specific conductance[b]	umho/cm						
Total dissolved solids	mg/L	720	763	772	781	791	800
Total organic carbon	mg/L	40	43	39	35	31	26

[a] Source: Unpublished water quality data (except P concentrations) for period August 1994 - August 1995 at sample station G252C, South Florida Water Management District.

[b] Water quality analysis for this parameter in progress at time of final report production

Table 4.8-4. Effect of STA - Dissolved Air Flotation/Filtration on Water Quality

Parameter	Unit	Concentration change caused by treatment	Ratio of effluent concentration to concentration in EAA raw water
Nutrients:			
Total phosphorus	ug/L	-144	0.040
Ammonia nitrogen	ug/L	-389	0.116
Total Kjeldahl nitrogen	ug/L	-1,939	0.282
Nitrate nitrogen	ug/L	-415	0.078
Nitrite nitrogen	ug/L	-69	0.014
Total nitrogen	ug/L	-2,423	0.248
Metals:			
Aluminum	ug/L	-288	0.030
Copper[a]	ug/L		
Iron	ug/L	216	1.603
Manganese	ug/L	56	4.294
Mercury (total)	ug/L	-1.9E-03	0.122
Mercury (methyl)	ug/L	-1.5E-04	0.254
Zinc	ug/L	3	0.400
Ions:			
Sulfate	mg/L	-8	0.873
Silica	mg/L	-5	0.815
Chloride	mg/L	54	1.403
Calcium	mg/L	9	1.120
Magnesium	mg/L	0	1.000
Sodium	mg/L	17	1.189
Potassium	mg/L	0	1.000
Others:			
Alkalinity as $CaCO_3$	mg/L	-15	1.104
pH	s.u.	-0.29	0.960
Specific conductance[a]	umho/cm		
Total dissolved solids	mg/L	78	1.118
Total organic carbon	mg/L	14	0.632

[a] Water quality analysis for this parameter in progress at time of final report production

Other Non-Economic Criteria

Robustness. Since this treatment train includes an STA, it can provide significant flow equalization capacity and the opportunity to accommodate varying water depths during extreme runoff events. During periods of prolonged drought, precautions must be taken to avoid drying of the STAs which could result in re-release of precipitated phosphorus. When flows greatly exceed the design flow, the STA phosphorus removal capability may be temporarily impaired. By adding a treatment facility to the STA, it can significantly improve the STAs ability to respond to changes in effluent P concentration.

Hydropattern Restoration. Due to the size and nature of the STAs, there will be a great amount of flexibility in controlling effluent discharges to the water conservation areas, thus having a great ability to restore the hydropatterns.

Byproduct Generation. Chemicals required for the treatment train include iron or alum salts for precipitation of phosphorus, lime for pH adjustment, as necessary, and possibly polymer to enhance coagulation, flocculation, and filtration. Solids removed from the treatment processes will require thickening and subsequent disposal of the thickened sludge in a dedicated land disposal site. Sludge production will be less than that for a stand alone Chemical Treatment/DAF/Filtration plant.

Permittability. Both the EFA and the Consent Decree include direct language regarding STAs. Therefore, since this treatment train includes an STA, it would improve the permittability of the train based upon legal issues. There are reasonable assurances that this treatment trains has the ability to meet the current effluent P goals and meet the Class III water quality criteria. Furthermore, the train has the flexibility to meet any Phase II threshold P level. There may, however, be perception problems because of the treatment facility which might affect its ability to pass the "public interest test" required to obtain federal approvals. The treatment plant may be perceived as having a negative impact on the natural surroundings and intent of the Everglades and the EFA.

Impact on the C&SF Project. With respect to water supply, there is a potential for the STAs to have an adverse impact on the C&SF Project. This is due to the need to provide water to the STAs during the dry periods to avoid re-release of accreted phosphorus. In this case, the STA would be a net user of water and have an impact on the water supply. Due to their size and capacity, however, the ability of the STAs to attenuate peak flow rates and store water for later release could improve current conditions.

Compliance with the EFA. Again, since the EFA includes language regarding STAs, and an STA is included in this treatment train, it would meet the specific policy of the EFA. The total implementation time for the construction of this treatment train can meet the schedule set by the EFA, and it has the ability achieve an effluent P concentration of 10 ppb.

Compliance with Federal Consent Decree. Since this treatment train does include an STA, it would meet the requirements of the Federal Consent Decree on policy issues. This is because the policy is based upon STAs. By adding the treatment facility to the STA, it has the potential of improving the water quality above the phosphorus limits and Class III water quality standards set by the federal consent decree.

RESEARCH PRIORITIES

Performance of the STAs in treating runoff from the EAA is by far the most documented of any of the treatment technologies being investigated in this evaluation. Ongoing research activities in the ENR will continue over the next several years to advance the knowledge needed for more efficient and effective designs. Specifically, relationships between P removal and loading rate, detention time, and operating water depth should be refined.

With respect to the chemical treatment/DAF/filtration portion of the treatment train, this investigation has identified tasks that should be undertaken prior to implementation of full-scale systems.

1. Evaluate the effects of the following parameters on quality of DAF effluent and the solids concentration of the floated solids:

   A. Processing rate (gpm/sq ft)
   B. Iron dose.
   C. Polymer dose
   D. pH
   E. Recycle rate
   F. Aeration system pressure and air rate.

2. Evaluate the effects of the following parameters on filter effluent quality and the rate of headloss buildup.

   A. Media design
   B. Processing rate (gpm/sq ft)
   C. Filter feed quality
   D. Filtration aids.
   E. Media cleaning procedures.

3. Evaluate and document the effectiveness of chemical treatment on mercury and methyl mercury removal.

4.9 OTHER DEVELOPING PHOSPHORUS REMOVAL TREATMENT TRAINS

SECTION 4.9

OTHER DEVELOPING PHOSPHORUS REMOVAL TREATMENT TRAINS

In addition to the eight treatment trains discussed previously, three other potentially attractive treatment trains were identified during this investigation. These three treatment trains are:

1. Submerged Vegetation/Limerock
2. STA coupled with Submerged Vegetation/Limerock
3. Low Intensity Chemical Dosing of STA

During the technology screening phase of this investigation, Submerged Vegetation/Limerock and Low Intensity Chemical Dosing of STAs were given high ratings as individual treatment technologies that were potentially capable of achieving low effluent P concentrations at the basin scale in the EAA. However, insufficient data on these technologies currently exist to allow a full evaluation.

Presented in the following sections are general descriptions of each of the three developing treatment trains and their potential for removing P from EAA drainage waters. No cost estimates are presented due to the lack of data on which to base concept level designs for basin scale application in the EAA. However, discussions of non-economic issues associated with the treatment trains are presented. Also discussions of priorities for research activities are presented, focusing on those items which are critical to confirming the performance, cost and potential water quality impacts of these developing phosphorus removal treatment trains.

Submerged Vegetation/Limerock

The Submerged Vegetation/Limerock technology consists of two unit processes in series: (1) a submersed macrophyte (SM) wetland system, and (2) a limerock contact process employing a bed of coarse limerock aggregate. The objective of the technology is to capitalize on the naturally occurring processes of South Florida marshes to provide a passive means of phosphorus (P) removal[1].

Process Description. Phosphorus-laden runoff is fed into the SM wetland. SM and periphyton photosynthesis raises the water column pH, which results in precipitation and co-precipitation of P in the wetland as calcium phosphate compounds. The elevated pH water is subsequently fed into a limerock bed, where the limerock promotes heterogenous nucleation and surface precipitation of amorphous (geochemically mestastable) phosphate compounds[1]. Performance fluctuates diurnally, with highest pH and best performance during daylight hours. In laboratory studies, the wetland pH has increased to as high as 11. During these studies, the limerock system pH varied between 8 at night and

9.7 during the day. In addition to polishing the effluent from the wetland, the limerock bed served to reduce fluctuation in effluent water quality.

The macrophytes, which are rooted to the bottom, can obtain nutrients from the sediments or the water column. P is precipitated on the macrophytes and the sediments. The macrophyte community is controlled by water depth.

P removal on the limestone appears to be predominantly by precipitation, which means that the P removal capacity of the limerock does not become exhausted after initial coverage, as it would if adsorption was the primary P-removal mechanism. Therefore, the limestone only needs replacement after precipitated P or suspended solids build up to such an extent that hydraulic flow is impaired. In the laboratory studies, there was no evidence of chemical or microbial fouling of the limestone. Investigators believe that replacement, flushing, or regeneration of the limerock should not be necessary for many years[2].

This process has had only limited testing. A 40-day laboratory testing program on EAA drainage water used wetland and limerock hydraulic retention times of 2.6 days and 1.8 hours, respectively. The wetland microcosm consisted of a mature stand of the submerged macrophyte *Ceratophyllum demersum* and peat soil. Water depth was about 1.2 ft. The limerock contact process was conducted in a 50-cm long upflow filter[2]. Limerock particle size ranged from 1/2 to 1 inch. Larger sizes may be needed at full scale to provide desired flow capacity. P removal rates for the SM wetland and the limerock contact process were reported to be 13 and 42 mg/m^2-day, respectively[1]. No attempt was made during the laboratory study to adjust the wetland or limerock processes to optimize treatment results[2].

In this evaluation, EAA flows were assumed to be pumped into the SM wetlands component by means of an inflow pumping station. Effluent from the wetlands component was assumed to flow by gravity into a limerock contact basin located immediately downstream of the wetland. Flow collected at the downstream end of the limerock contact basin was assumed to flow into a discharge canal from where it would be pumped directly into a conservation area or into a receiving canal. A schematic of the treatment units is presented in Figure 4.9-1.

Phosphorus Removal Capability. The 40-day microcosm-scale laboratory study on EAA drainage water indicated an average P removal of 78 percent, from 129 ppb to 28 ppb. On three of the days, effluent P concentration was below 25 ppb, declining to 10 ppb on day 39[1]. The wetland component removed most of the P (nearly 90 percent) during the laboratory study. Performance of the system generally improved as the test progressed. The investigators believe that with more research, and with optimization of unit process variables, effluent P concentrations of 10 ppb or less can be achieved on a consistent basis[3]. Initial indications are positive, but many questions remain as to how this technology will scale up and how it will be affected by the highly variable hydrologic conditions in the EAA.

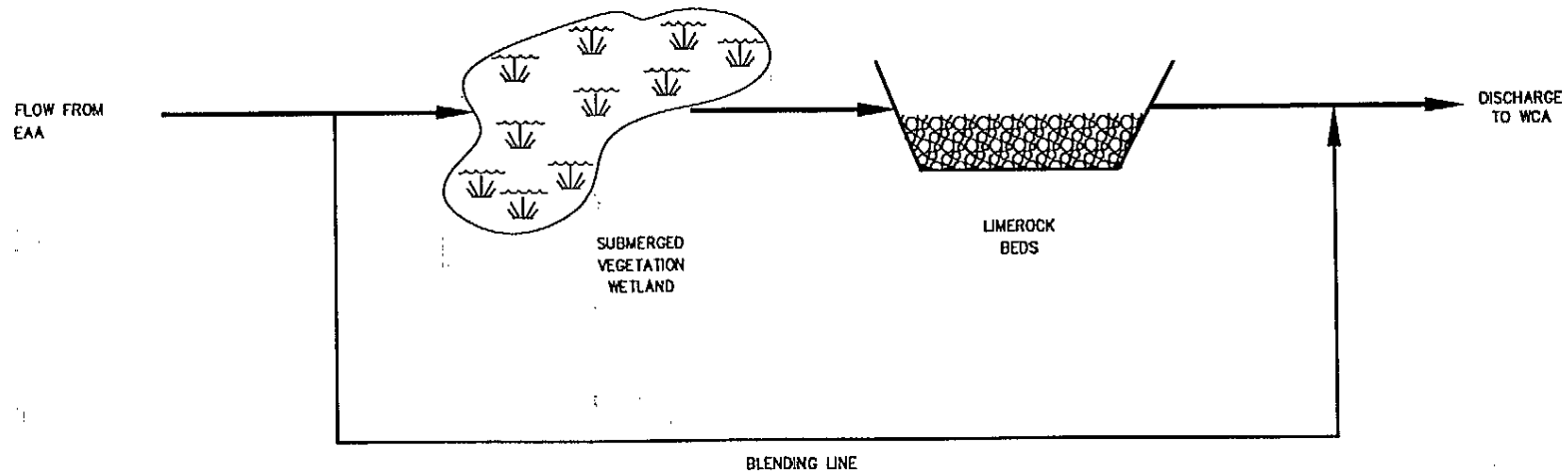

FIGURE. 4.9-1
SUBMERGED VEGETATION WETLAND/LIMEROCK

PEER/Brown and Caldwell
Consultants

Also, the literature suggests that to achieve effective P removal, biomass may need to be harvested to prevent P release back into the water[4]. It is unclear how P will be stored in the wetland system and whether harvesting of biomass will be necessary. Other uncertainties include (1) the potential for dry-down and phosphorus release during drought conditions, (2) the potential for plugging of the limerock bed due to solids carryover from the wetlands, and/or precipitation of P over the long term, and (3) the effect of variable influent P concentrations on removal rates and overall system performance.

Economic Analysis. Concept level cost estimates for Submerged Vegetation/Limerock were prepared for the technology screening evaluation discussed in Chapter 2 based upon the P removal rates obtained in the laboratory experiments. However, these cost estimates are inconclusive because P removal rates have yet to be confirmed outside of the laboratory. How the sizes of the treatment units scale up from laboratory scale to full scale is highly speculative and any attempt to develop more detailed cost estimates for full scale implementation of this technology would be counterproductive at this time.

Water Quality. Table 4.9-1 summarizes the results of laboratory analyses performed during the experimental studies on the Submerged Vegetation/Limerock technology. Concentrations and percent removals are averages as reported by the researchers for effluent from the limerock contact process (DeBusk and Dierberg, 1996). Data for effluent from the SM wetland for constituents other than P have not been reported.

Table 4.9-1 Predicted Effluent Water Quality for Submerged Vegetation Limerock

Constituent	Unit	Influent	Effluent	% Removal
Total P	mg/L	0.129	0.026	78
Soluble Reactive P	mg/L	0.114	0.009	92
Conductivity	mg/L	1098	859	22
Alkalinity ($CACO_3$)	mg/L	277	141	49
Calcium	mg/L	120	57	52
Magnesium	mg/L	27.8	25.6	8
Iron	mg/L	0.088	0.067	24
DOC	mg/L	26.1	28.2	-8
Color	CPU	356	304	15
Dissolved Oxygen	mg/L	6.0	7.6	-27

As indicated previously, significant reductions in total and soluble reactive phosphorus were demonstrated during the experiments. The effects of calcium carbonate precipitation can also be seen by the reduction in calcium and alkalinity concentrations. While significant alkalinity was shown to remain in the effluent, the loss of alkalinity may be a concern in some areas of the EAA where influent alkalinity may not be as high as reported in the experiments.

Discussion of Other Non-Economic Issues. To a large extent, the Submerged Vegetation/ Limerock technology is comparable to an STA with respect to many of the other non-economic evaluation criteria considered in this evaluation. It is a passive, land based treatment technology that relies upon treatment processes that are naturally occurring in South Florida. Therefore, it should not generate by-products and should probably satisfy the intent of the EFA and the Federal Consent Decree in terms of state and federal policy issues. It has the potential to be implemented within the schedule set forth in the EFA and may be able to achieve the EFA Phase II default value of 10 ppb effluent P. The technology would also probably not have problems passing the "public interest test" that is required to obtain federal permit approvals. However, permits will be difficult to obtain until such time as P removal performance and effluent water quality characteristics have been fully demonstrated over a reasonable length of time.

Because the technology includes an aquatic wetlands system which is sensitive to operating water depth and dry down, its ability to retain water for the purposes of restoring hydropattern, and enhancing water supply through the C&SF Project is limited compared to the STAs. In fact, because of the sensitivity to dry down, more make-up water may be necessary during dry periods with this technology than with the STAs. However, if the wetlands system can be designed in modules, it may be possible to take part of the system off-line during the dry season and reduce dry down related impacts.

Research Priorities. At the present time, the evaluation of this technology can be based only on results of the laboratory scale experiments performed over a 40-day period. These experiments show wetland P removal rates that are substantially higher than those currently being used for STA design. It is questionable how both the wetland and limerock contact process components scale up from the laboratory to basin-scale implementation in the EAA. Also, the use of basins for the limerock contact process may not be the most effective configuration. The use of flow-through channels or berms constructed of limerock may be another possible option.

It is clear that further testing of this technology must be accomplished to confirm P removal performance and to allow a meaningful economic analysis to be performed. Among the most important questions to be answered during feasibility testing of this technology are the following:

1. What are the most effective operating parameters for P removal in the SM wetland (i.e., operating depth, detention time, pH, density of vegetation etc.)?

2. Is harvesting of biomass necessary to achieve desired P removal performance and, if so, is there any beneficial use for it?

3. What P removal rates should be used for basin-scale implementation of the technology in the EAA and what effluent P concentration can the technology reliably achieve on a long-term sustainable basis?

4. How much P should be removed in the SM wetland versus the limerock contact process to achieve optimum removal efficiency?

5. What effect does dry-down have on the release of P back into the water column and should the technology be designed in modules so that some of them could be shut down during the dry season?

6. What size limerock aggregate is most effective in removing P and what are the head losses for flow through the material?

7. What is the sensitivity of P removal in the limerock contact process to the chemical composition of the limerock used?

8. Will plugging of the limerock aggregate be a problem and will limerock regeneration or replacement be necessary on a frequent basis?

9. What is the best configuration for construction of full-scale unit processes and what design features should be included to provide maximum potential for satisfying treatment objectives?

This technology appears to have significant potential to reduce P concentrations to very low levels at costs that are competitive with or lower than other technologies. However, feasibility testing in larger tanks, and then in pilot scale test cells, must be accomplished before any of its potential performance and cost advantages can be confirmed.

STA/Submerged Vegetation Limerock

This treatment train combines traditional STAs with Submerged Vegetation/Limerock as a follow-on technology to achieve lower effluent P concentration than STAs can achieve on their own.

Process Description. Process descriptions for both STAs and Submerged Vegetation/Limerock have been presented previously as individual treatment technologies. In this treatment train, the two technologies would be merged, either by integrating Submerged Vegetation/Limerock onto the original STA site in the form of polishing cells or by constructing Submerged Vegetation/Limerock downstream of the STA as a separate follow-on treatment unit. A process schematic of the treatment train is illustrated in Figure 4.9-2.

Phosphorus Removal Capability. The phosphorus removal capability of this treatment train should be similar to that projected for the Submerged Vegetation/Limerock technology by itself. However, data from Cell 4 at the ENR Project raise some questions about the ability of the SM wetland component to remove P when influent P concentrations are already low. If feasibility testing of the SM wetland shows its performance to be reduced in this application, it may be

possible to use only the limerock contact process as a follow-on to the STA if pH levels in the STA will allow that process to function effectively.

Economic Analysis. For the reason identified previously in the discussion of the Submerged Vegetation/Limerock technology, no economic analysis of this treatment train was performed.

Water Quality Evaluation. Data from the laboratory experiments on Submerged Vegetation/Limerock offer some evidence on which to predict effluent water quality assuming influent P at the 90 to 150 ppb level. In this case, influent P to the SM wetland component will probably be in the 30 to 50 ppb range. Data from Cell 4 of the ENR Project suggests that removal rates calculated from the laboratory experiment data are probably not valid at this influent P concentration. Therefore, a meaningful projection of effluent water quality from the coupled treatment train and an evaluation of possible impacts on downstream water quality are not possible at this time pending data from feasibility testing.

Discussion of Other Non-Economic Issues. The STA/Submerged Vegetation Limerock treatment train satisfies all of the policy issues and standards set forth in the EFA and the Federal Consent Decree. As a natural system, it would probably pass the "public interest test" required to obtain federal permit approvals, and may be able to achieve the EFA Phase II default value of 10 ppb effluent P. Additionally, the technology provides all of the benefits of STAs with regard to robustness, hydropattern restoration, and C&SF Project operation. If the Submerged Vegetation/Limerock technology can be shown to reduce STA effluent P concentrations effectively and at reasonable cost, this treatment train could become attractive in the future for satisfying the Phase II P limitations for discharge into the water conservation areas.

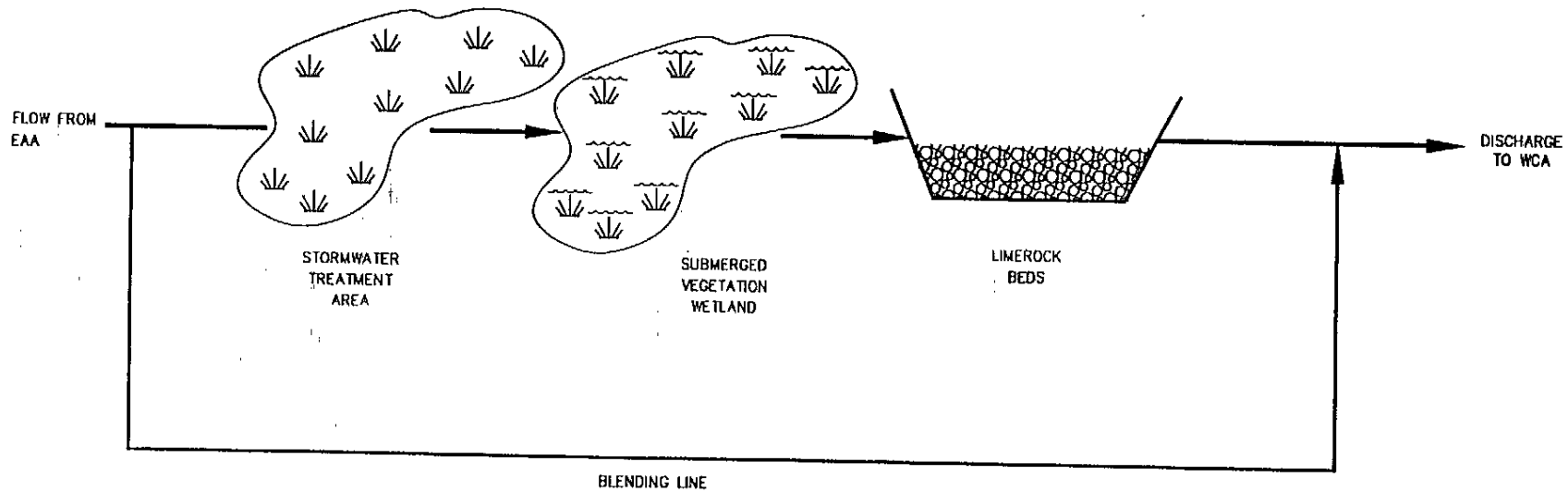

PEER/Brown and Caldwell
Consultants

FIGURE. 4.9–2
STORMWATER TREATMENT AREA /
SUBMERGED VEGETATION WETLAND/LIMEROCK

Research Priorities. If this treatment train is to be considered for application in the EAA, research should be conducted to determine how the two technologies can be merged into an integrated set of unit processes to improve performance and reduce cost. Possibilities could include developing a SM wetland as a polishing cell within the traditional STA treatment area and including a flow-through limerock berm at the downstream end of the wetland treatment area instead of providing a separate basin for the limerock contact process. Specific research also needs to be conducted to determine how well the SM wetland component will remove P from influent that already has a low P concentration.

Low-Intensity Chemical Dosing of STAs

This treatment train is proposed as a potential method of enchancing P removal in STAs at little additional cost. It is being considered here as a developmental treatment train because the technology has not been applied previously to treatment wetlands such as STAs.

Process Description. This treatment process is similar to the STAs except that a low intensity dose of chemical (i.e., ferric chloride) is applied to the STAs to enhance and accelerate the rate of P removal through precipitation of soluble P and coagulation of chemically formed and naturally occurring particulate P. The STAs act as settling basins and filters. Chemical precipitation provides an additional mechanism for P removal, and may enhance the P-retention capability of the sediments. The range of chemical dosing is limited to less than 5 mg/L to promote P removal without any significant accumulation of chemical sludge in the STAs.

A chemical feed system would be incorporated into the inlet pumping system for the STAs. Feed pumps would be paced to the stormwater pumps. Mixing of the chemical with the drainage water would occur as the water flows through the pumps and the supply canal and into the STAs. It is expected that the light floc particles produced by the chemical addition would not settle out in the supply canal, but rather, would be filtered out or settled out in the STA. It is not expected that deposition of solids would be significant enough to adversely impact the growth of vegetation in the STA. A schematic of the treatment train is illustrated in Figure 4.9-3.

Phosphorus Removal Capacity. Data on phosphorus removal mechanisms related to low chemical dosing of STAs is not available in the literature because the practice, as proposed for the EAA, has not previously been accomplished. Wetlands have demonstrated the ability to perform well in conjunction with chemical additions[5]. However, the most relevant data appears to be from low level chemical dosing of river and lake waters in St. Paul, Minnesota, where ortho-P removals on the order of 60 to 70 percent were achieved with chemical dosages of less than 1 ppm[6]. Without actual field testing, however, it remains unclear as to how much impact low intensity chemical dosing might have on STA performance.

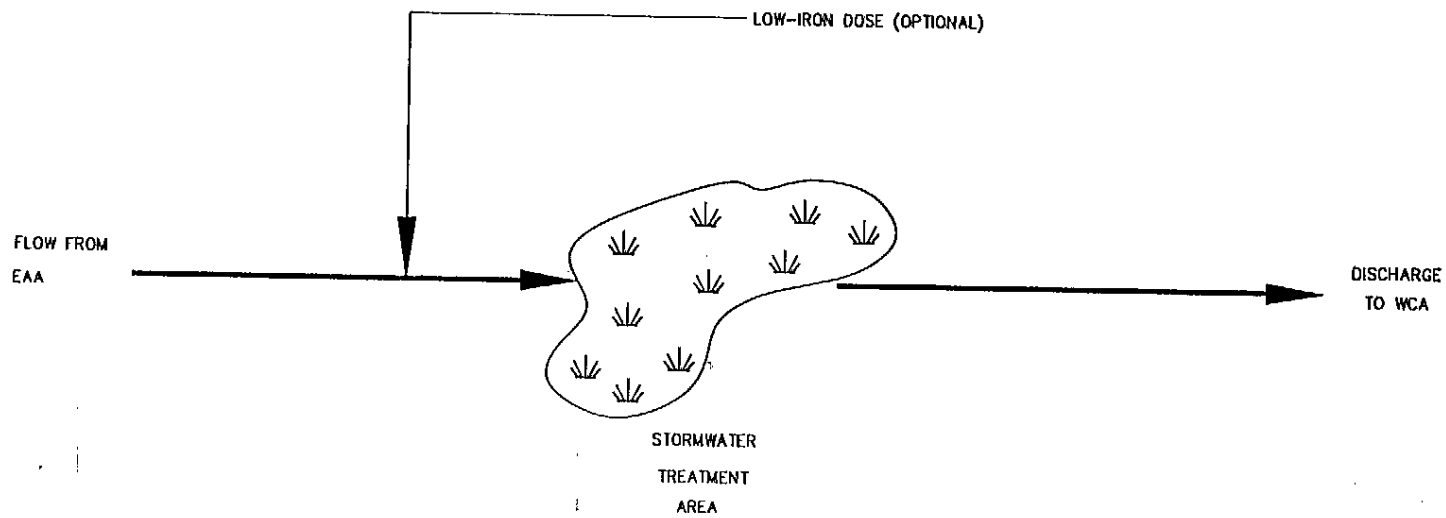

PEER/Brown and Caldwell
Consultants

FIGURE. 4.9-3
LOW INTENSITY CHEMICAL DOSING OF STA's

Recent (1995) data from the ENR Project suggest that effluent P concentrations from STAs alone can be on the order of 30 ppb (or possibly lower). In theory, addition of low chemical dosages to the water entering the STA could enhance the P removal performance of the STA and improve its ability to sustain performance over the long term. However, there are many questions that must be answered about the process before the impact of chemical addition on STA performance can be determined.

Economic Analysis. The economics of this treatment train are expected to be very similar to the STAs as a stand-alone treatment technology since the cost of adding a chemical feed system to the influent pumping station would be a very small percentage of the overall STA cost. However, since no actual data exist on chemical dosage requirements or on impacts to STA operational requirements, no detailed economic analysis was performed on this treatment train. A preliminary economic analysis was performed during the screening of treatment technologies and the results of this preliminary analysis are presented in Appendix E of this report.

Water Quality. There is no published data available on which to base predictions of effluent water quality from STAs dosed with small amounts of chemical. It is expected, based on the analyses performed for the STAs and the chemical treatment technologies individually, that effluent P would be reduced somewhat and that chlorides would be increased somewhat (if ferric chloride was used as the coagulant). Other constituents would be expected to be generally unaffected by the chemical addition. The anticipated percentage reduction in P and the possible percentage increase in chlorides, however, cannot be reasonably calculated and must be determined by feasibility testing.

Discussion of Other Non-Economic Issues. This treatment train would be essentially the same as the STAs as stand-alone treatment units with respect to the non-economic issues considered in this evaluation. The only possible difference would be the potential for low level chemical by-product generation due to the chemical dosing of the influent. A discussion of STAs with respect to these issues was presented in a previous section of this report.

Research Priorities. Increased removals of P in the STAs has been considered possible based upon data from dosing of lake and river waters in Minnesota, England, and Germany. However, enhanced P removal in treatment wetlands due to Low Intensity Chemical Dosing has not been documented. Questions that should be answered during pilot-scale demonstration testing include the following:

1. What chemical dosages are required to effect noticeable reductions in effluent P concentration, while minimizing solids deposition in the supply canal and residual chemical in the STA effluent?

2. Will the increased quantity of settled solids in the STA affect the viability of the wetland vegetation?

3. If iron is used, how significant is the release of iron-based P from sediments under anoxic conditions and what effect does this re-release have on the ability of downstream vegetation to remove influent P?

4. What is the impact of low-intensity chemical dosing on the active life of an STA?

In theory, Low Intensity Chemical Dosage of STAs would seem to have the potential to extend the P removal capcity of STAs at very low additonal cost. However, this needs to be confirmed through field testing. If re-release of iron-bound P occurs in a location or in such a manner that it cannot be removed again prior to passing out of the STA, the long-term benefits of the chemcial dosing may be reduced significantly.

References

1. DeBusk, T.A. and Dierberg, F.E., "An Integrated Wetland-Chemical Phosphorus Removal Technology." No date.

2. DeBusk, T.A. and Dierberg, F.E., Personal communication. June 21, 1996.

3. DeBusk, Thomas A. Personal communication. June 7, 1996.

4. Brix, Hans and Schlerup, Hans-Henrik. "The Use of Aquatic Macrophytes in Water Pollution Control," Ambio, Vol. 16, No. 2, 1989, pp. 100-107.

5. Kadlec, Robert H. Personal communication, June 24, 1996.

6. Walker, William W., et al., "Design and Evaluation of Eutrophication Control Measures for the St. Paul Water Supply." Lake and Reservior Management, 1989 5(1): 71-83.

7. South Florida Water Management District, Everglades Protection Project. Contract C-3051, Amendment 6. Analysis and Development of Chemical Treatment processes. Final Draft Report, June 1993.

CHAPTER 5

SENSITIVITY ANALYSES

During the development of this project there were four questions which seemed likely to have significant impact on the finding of facts. These questions were:

1. Will sizing the stormwater treatment area (STA) to achieve 50 ppb effluent P concentration result in the optimum relationship in a coupled STA/chemical treatment system?

2. How will present worth figures be affected if the discount rate is changed?

3. Is there a change to the optimum relationship of flow equalization basin (FEB) size and chemical treatment plant capacity, as defined by minimum present worth, if the percentage of P removed in the FEB changes?

4. What impact is there on present worth if the salvage values change?

The following sections address each of these questions by discussing comparable analyses completed for differing test conditions. The variance from the base case defines the sensitivity of our work to that issue.

SENSITIVITY OF SIZING RELATIONSHIP OF STA AND CHEMICAL PROCESS TREATMENT PLANTS

Treatment trains were developed using five of the seven technologies advanced after screening criteria were applied. The treatment trains were to have an influent P concentration of 150 ppb or 90 ppb. For each of these influent P cases, the technologies were to be evaluated as stand alone technologies and they were to be coupled to an STA.

For a coupled system, the STA was assumed to be the lead treatment process in the train and was assumed to treat the EAA flows to an effluent P concentration of 50 ppb before subsequent treatment in a secondary natural process or a chemical treatment plant.

An analysis was performed to test the impact to present worth of a coupled system if the STA effluent P concentration changed. This analysis included sizing the STA for an influent P concentration of 150 ppb and three different effluent P concentrations (75 ppb, 50 ppb, and 30 ppb). A chemical treatment/direct filtration plant then was sized to further reduce the effluent P

concentrations to 50 ppb, 40 ppb, 30 ppb, 20 ppb and 10 ppb for each of the above stated STA effluent P cases (75 ppb, 50 ppb, 30 ppb). The same models and methodologies discussed earlier in this document were used to size the STA. The model showed that STA area and STA effluent P values are inversely related; i.e., when STAs are designed to achieve effluent P values above 50 ppb the area of the STA decreases. Conversely, when STAs are designed to achieve effluent P values below 50 ppb, the area of the STA increases.

A present worth analysis was conducted for each of the influent and effluent P scenarios identified above. Table 5-1 presents the present worth analysis for the 75 ppb STA effluent P case. Table 5-2 presents the base case, the present worth analysis for the 50 ppb STA effluent P case. Table 5-3 presents the present worth analysis for the 30 ppb STA effluent P case. Table 5-4 graphically shows the results of this analysis.

Table 5-4 illustrates a lower present worth for an STA designed to treat to 50 ppb effluent P over a coupled system to treat to 50 ppb. Further, an STA sized to achieve 30 ppb P in the effluent had a lower present worth cost than a coupled system sized to achieve the same effluent P concentration. Only for final effluent P concentrations below 20 ppb would it appear economically attractive to size STAs to produce effluents with P concentrations greater than 50 ppb, and then only marginally so.

SENSITIVITY OF FEB SIZE TO CHEMICAL TREATMENT SYSTEM PRESENT WORTH COSTS

In developing present worth costs for treatment trains which are preceded by FEBs, it was recognized that some degree of P removal will be achieved in the FEB due to settling of particulates in the influent prior to the chemical treatment. As a result, the chemical treatment plant should be sized based on an influent P concentration which is lower than that in the EAA discharge. To account for this reduction in influent P it was necessary to determine the level of P removal expected to be achieved in a FEB. Data from the 1995 Monitoring Report for the Everglades Nutrient Removal Project (ENR) showed that the average particulate P concentration in discharges from the EAA was about 30 percent of the total P concentration.

Total P removal in an FEB depends on the settling characteristics of the water and the basin detention time. There is limited available information on the level of particulate P removal in EAA runoff that could be achieved in an FEB. Expected particulate P removal from such basins based on EAA water may range from 10 percent to 50 percent. Additional pilot testing is required to determine the settling characteristics and the corresponding level of particulate P removal in an FEB. However, for the purposes of this study, it was assumed that the fraction of particulate P in the influent was 30 percent of the total P and that 33 percent of the particulate P was removed in the FEB, resulting in a net P removal of about 10 percent.

Table 5-1. Summary of Present Worth Analysis for 75 ppb STA Effluent P Concentration

Parameter	Influent/Effluent P Levels				
	150/50	150/40	150/30	150/20	150/10
Basis of Design					
Influent PS capacity, mgd	2330	2330	2330	2330	2330
Influent PS average flow, mgd	189	189	189	189	189
STA area, acres	4640	4640	4640	4640	4640
FEB area, acres	0	0	0	0	0
Treatment plant influent PS capacity, mgd	75	114	173	288	700
Treatment plant influent PS average flow, mgd	70	99	129	159	189
Treatment plant land area, acres	15	21	27	33	40
Sludge disposal area, acres	147	208	271	334	397
Effluent PS capacity, mgd	2330	2330	2330	2330	2330
Effluent PS average flow, mgd	189	189	189	189	189
Total land area, acres	5,282	5,356	5,432	5,508	5,584
50 - Year Present Worth, $ million					
Capital Cost	119.82	125.57	133.75	148.67	199.28
O&M Cost	80.39	96.62	113.40	130.19	146.98
Replacement Cost	6.31	7.02	8.05	9.97	16.59
Salvage Value	(0.64)	(0.55)	(0.40)	(0.13)	0.88
Total	205.88	228.66	254.80	288.71	363.73
Present worth, $/million gallons treated	59.69	66.29	73.87	83.70	105.45
Present worth, $/pound P removed	71.57	72.26	73.81	77.20	90.31

Table 5-2. Summary of Present Worth Analysis for 50 ppb STA Effluent P Concentration

Parameter	Influent/Effluent P Levels				
	150/50	150/40	150/30	150/20	150/10
Basis of Design					
Influent PS capacity, mgd	2330	2330	2330	2330	2330
Influent PS average flow, mgd	189	189	189	189	189
STA area, acres	7410	7410	7410	7410	7410
FEB area, acres	0	0	0	0	0
Treatment plant influent PS capacity, mgd	0	45	98	177	550
Treatment plant influent PS average flow, mgd	0	45	90	138	190
Treatment plant land area, acres	0	9	19	29	40
Sludge disposal area, acres	0	95	189	290	399
Effluent PS capacity, mgd	2330	2330	2330	2330	2330
Effluent PS average flow, mgd	189	189	189	189	189
Total land area, acres	8,151	8,265	8,380	8,502	8,634
50 - Year Present Worth, $ million					
Capital Cost	125.80	143.89	151.90	163.15	209.87
O&M Cost	36.40	69.10	94.28	121.14	150.24
Replacement Cost	3.50	5.81	6.79	8.20	14.27
Salvage Value	(2.41)	(2.08)	(1.96)	(1.77)	(0.86)
Total	163.28	216.71	251.02	290.72	373.53
Present worth, $/million gallons treated	47.34	62.83	72.78	84.29	108.29
Present worth, $/pound P removed	56.76	68.49	72.72	77.74	92.75

Table 5-3. Summary of Present Worth Analysis for 30 ppb STA Effluent P Concentration

Parameter	Influent/Effluent P Levels				
	150/50	150/40	150/30	150/20	150/10
Basis of Design					
Influent PS capacity, mgd	2330	2330	2330	2330	2330
Influent PS average flow, mgd	189	189	189	189	189
STA area, acres	7410	8965	11020	11020	11020
FEB area, acres	0	0	0	0	0
Treatment plant influent PS capacity, mgd	0	0	0	94	425
Treatment plant influent PS average flow, mgd	0	0	0	88	188
Treatment plant land area, acres	0	0	0	18	39
Sludge disposal area, acres	0	0	0	185	395
Effluent PS capacity, mgd	2330	2330	2330	2330	2330
Effluent PS average flow, mgd	189	189	189	189	189
Total land area, acres	8,151	9,862	12,122	12,346	12,600
50 - Year Present Worth, $ million					
Capital Cost	125.80	141.85	163.06	188.61	232.04
O&M Cost	36.40	37.91	39.92	96.68	152.64
Replacement Cost	3.50	3.53	3.57	6.80	12.36
Salvage Value	(2.41)	(3.19)	(4.23)	(3.79)	(2.99)
Total	163.28	180.10	202.31	288.30	394.06
Present worth, $/million gallons treated	47.34	52.21	58.65	83.58	114.24
Present worth, $/pound P removed	56.76	56.91	58.61	77.09	97.85

Table 5-4 Changes to Present Worth of a Coupled STA with Direct Filtration Based on Changes in the Size of the STA

Treatment Plant Effluent P Concentration	Present Worth for Different STA Effluent Total Phosphorus Concentrations (ppb)		
	75	50	30
10 ppb	364	374	394
20 ppb	289	291	288
30 ppb	255	251	202
40 ppb	229	217	180
50 ppb	206	163	163

To test the sensitivity of this assumption, present worth analyses were performed for different combinations of influent P concentration (i.e., 150 ppb and 90 ppb), effluent P concentrations (i.e., 30 ppb and 10 ppb), and particulate P removal (i.e., 0, 33, and 60 percent). These values were selected to investigate possible combinations that would bracket a reasonable range of P removal. In all cases, an influent particulate P fraction of 30 percent was used.

Because design concepts for FEBs are consistent between stand-alone chemical treatment technologies, the Chemical Treatment/Direct Filtration treatment train was considered representative of all chemical treatment trains. Any inferences drawn from the sensitivity analysis performed for direct filtration are therefore applicable to the other chemical treatment trains.

For each scenario, the chemical treatment plant was sized based on the capacity of the FEB. The combination of FEB and treatment plant with the lowest present worth value was selected as the optimum solution. The optimization procedure is discussed in more detail in Chapter 3, Methodology.

The results of the sensitivity analysis are summarized in Table 5-5. The results show that, compared to the 10 percent P removal baseline case, present worths for the other cases vary between plus 3.5 and minus 3.3 percent of the baseline present worth. This indicates that present worth of the chemical treatment trains is relatively insensitive to the level of P removal assumed in the FEB.

Table 5-5. Sensitivity of Present Worth Particulate P Removal in FEBs

Particulate P removal in FEB	Total P removal in FEB	Influent/Effluent P Concentration, ppb							
		150/30		150/10		90/30		90/10	
		PW	Δ	PW	Δ	PW	Δ	PW	Δ
60 %	18 %	255	-2.5%	350	-0.9%	221	-3%	343	-0.6%
33 %	10%	261		353		228		345	
0 %	0%	266	1.9%	355	0.6%	236	3.5%	347	0.6%

PW = Present worth ($, millions)
Δ = Percent Difference (%)

SENSITIVITY OF PRESENT WORTH VALUES TO CHANGES IN THE DISCOUNT RATE

Fifty-year present worth values were calculated for 8 treatment trains at each applicable P removal range using a net interest rate of 4 percent. This rate was based on the current 10-year government bond rate of 6.8 percent less an inflation rate of 2.8 percent. The inflation rate was based on a 5-year average of the Consumer Price Index, U.S. City Average.

The above base case was compared with the 50-year present worth which was calculated using a net interest rate of 7-5/8 percent. This was based on the current rate used by the U.S. Army Corps of Engineers in their economic analyses. This rate was determined by the U.S. Department of the Treasury.

Present worth values were calculated using a net interest rate of 7-5/8 percent for an STA, a chemical treatment plant, and a coupled system consisting of an STA followed by a chemical treatment plant. The results are summarized in Tables 5-6, 5-7, and 5-8, respectively.

An increase in the discount rate will effect a decrease in present worth. A technology with high operation, maintenance and replacement costs will be more sensitive to a change in the discount rate than a technology with lower operation, maintenance and replacement costs. As depicted in the tables, the higher operation, maintenance and replacement costs associated with a chemical treatment plant make this technology more sensitive to changes in the discount rate than a technology with lower operation, maintenance and replacement costs such as an STA. The sensitivity of the coupled STA - chemical treatment plant is greater than that of an STA alone, but less than that of a chemical treatment plant.

SENSITIVITY OF PRESENT WORTH VALUES TO CHANGES IN SALVAGE VALUE

A present worth for salvage value was calculated for each treatment train for each of the applicable phosphorus removal ranges considered in this investigation. Parameters included in the calculation of salvage value included pump station and treatment plant demolition costs; STA, FEB and sludge disposal site restoration costs; and STA, FEB, treatment plant and sludge land values. Salvage value of an asset may be stated as either a percentage of the first cost of an asset, or given a specific value. For the purpose of this analysis, the value of land was given three values for the comparative analysis.

Land value in 50 years was evaluated at three levels: zero, purchase price (base case) and purchase price plus 2.8 percent inflation. Present worth figures were generated for an STA, a chemical treatment/direct filtration plant, and a coupled STA-chemical treatment/direct filtration treatment train.

Table 5-6. Summary Discount Rate Sensitivity Analysis -- Stormwater Treatment Areas

Parameter	Influent/Effluent Phosphorus Levels									
	150/50	150/40	150/30	150/20	150/10	90/50	90/40	90/30	90/20	90/10
50-Year Present Worth ($, millions)										
Net rate = 4 percent	163	180	202	---	---	127	144	166	---	---
Net rate = 7 5/8 percent	149	165	188	---	---	112	129	152	---	---
Percent Difference	-8.6	-8.3	-6.9	---	---	-11.8	-10.4	-8.4	---	---

Table 5-7. Summary Discount Rate Sensitivity Analysis --Chemical Treatment/Direct Filtration

Parameter	Influent/Effluent Phosphorus Levels									
	150/50	150/40	150/30	150/20	150/10	90/50	90/40	90/30	90/20	90/10
50-Year Present Worth ($, millions)										
Net rate = 4 percent	220	239	261	291	353	169	194	223	258	318
Net rate = 7 5/8 percent	170	186	204	228	284	132	151	173	201	253
Percent Difference	-22.7	-22.2	-21.8	-21.6	-19.5	-21.9	-22.2	-22.4	-22.1	-20.4

Table 5-8. Summary Discount Rate Sensitivity Analysis -- STA -Chemical Treatment/Direct Filtration

Parameter	Influent/Effluent Phosphorus Levels									
	150/50	150/40	150/30	150/20	150/10	90/50	90/40	90/30	90/20	90/10
50-Year Present Worth ($, millions)										
Net rate = 4 percent	163	215	246	282	339	127	178	212	250	309
Net rate = 7 5/8 percent	149	186	207	232	276	112	149	172	200	246
Percent Difference	-8.6	-13.5	-15.9	-17.7	-18.6	-11.8	-16.3	-18.9	-20.0	-20.4

The present worths of STAs for each case stated above, at each of the P removal ranges, are summarized in Table 5-9. Present worths for chemical treatment plants for each case stated above, at each of the P removal ranges are summarized in Table 5-10. Present worths for coupled STA-chemical treatment plants for each case stated above at each of the P removal ranges are summarized in Table 5-11.

Comparison of present worth data revealed little sensitivity associated with variable land values in 50 years; however, it should be noted that intensive land based systems, such as STAs, show more sensitivity to variation in land values than do chemical treatment plants which have less land area requirements. For example, in the P removal range of 150 ppb to 30 ppb, varying the land value from purchase price to $0 results in a 2.87 percent, 1.61 percent and 0.21 percent increase in present worth values for an STA, a coupled STA-chemical treatment plant, and a chemical treatment plant, respectively, when compared to the base case. When land values were adjusted to purchase price plus inflation in the 150 ppb to 30 ppb P removal range, there was an 8.79 percent, 5.03 percent, and 0.91 percent reduction in present worth values for an STA, a coupled STA-chemical treatment plant, and a chemical treatment plant, respectively, when compared to the base case.

Table 5-9. Summary Salvage Value Sensitivity Analysis–Stormwater Treatment Areas

	Present Worth for Various Influent/Effluent Phosphorus Levels, million dollars									
Salvage Value of Land	150/50	% Diff	150/40	% Diff	150/30	% Diff	150/20	% Diff	150/10	% Diff
0	$167.30	2.40%	$184.95	2.62%	$208.28	2.87%	---	---	---	---
Purchase Price	$163.28		$180.10		$202.31		---	---	---	---
Purchase Price + Inflation	$151.33	-7.32%	$165.63	-8.03%	$184.53	-8.79%	---	---	---	---

	Present Worth for Various Influent/Effluent Phosphorus Levels, million dollars									
Salvage Value of Land	90/50	% Diff	90/40	% Diff	90/30	% Diff	90/20	% Diff	90/10	% Diff
0	$129.00	1.70%	$146.96	2.07%	$170.53	2.45%	---	---	---	---
Purchase Price	$126.81		$143.92		$166.36		---	---	---	---
Purchase Price + Inflation	$120.30	-5.13%	$134.85	-6.30%	$153.95	-7.46%	---	---	---	---

Table 5-10. Summary Salvage Value Sensitivity Analysis–Direct Filtration

	Present Worth for Various Influent/Effluent Phosphorus Levels, million dollars									
Salvage Value of Land	150/50	% Diff	150/40	% Diff	150/30	% Diff	150/20	% Diff	150/10	% Diff
0	$220.33	0.13%	$239.61	0.12%	$261.70	0.21%	$291.38	0.28%	$354.46	0.39%
Purchase Price	$220.05		$239.32		$261.14		$290.55		$353.08	
Purchase Price + Inflation	$218.62	-0.65%	$237.82	-0.63%	$258.76	-0.91%	$287.29	-1.12%	$348.13	-1.40%

	Present Worth for Various Influent/Effluent Phosphorus Levels, million dollars									
Salvage Value of Land	90/50	% Diff	90/40	% Diff	90/30	% Diff	90/20	% Diff	90/10	% Diff
0	$169.29	0.07%	$194.53	0.09%	$223.16	0.13%	$258.41	0.17%	$319.75	0.26%
Purchase Price	$169.17		$194.36		$222.88		$257.96		$318.92	
Purchase Price + Inflation	$168.46	-0.42%	$193.36	-0.51%	$221.44	-0.65%	$255.91	-0.79%	$315.62	-1.03%

Table 5-11. Summary Salvage Value Sensitivity Analysis–STA/Direct Filtration

	Present Worth for Various Influent/Effluent Phosphorus Levels, million dollars									
Salvage Value of Land	150/50	% Diff	150/40	% Diff	150/30	% Diff	150/20	% Diff	150/10	% Diff
0	$167.30	2.40%	$218.52	1.84%	$249.60	1.61%	$285.71	1.41%	$342.87	1.18%
Purchase Price	$163.28		$214.50		$245.58		$281.69		$338.83	
Purchase Price + Inflation	$151.33	-7.32%	$202.34	-5.67%	$233.22	-5.03%	$269.11	-4.47%	$326.02	-3.78%

	Present Worth for Various Influent/Effluent Phosphorus Levels, million dollars									
Salvage Value of Land	90/50	% Diff	90/40	% Diff	90/30	% Diff	90/20	% Diff	90/10	% Diff
0	$129.00	1.70%	$180.36	1.21%	$213.94	1.03%	$252.22	0.87%	$311.68	0.71%
Purchase Price	$126.81		$178.17		$211.74		$250.02		$309.47	
Purchase Price + Inflation	$120.30	-5.13%	$171.45	-3.77%	$204.80	-3.28%	$242.87	-2.86%	$302.11	-2.38%

APPENDIX A

EVALUATION CRITERIA

CONTRACT C-E008, AMENDMENT 3
DESKTOP EVALUATION OF TREATMENT TECHNOLOGY ALTERNATIVES
by PEER Consultants/Brown & Caldwell

EVALUATION CRITERIA

EVALUATION CRITERIA FROM THE EVERGLADES FOREVER ACT (EFA)

The EFA identifies the following initial evaluation criteria:

a. Levels of load reduction;
b. Levels of discharge concentration reduction;
c. Water quantity, distribution, and timing for the EPA;
d. Compliance with water quality standards;
e. Compatibility of treated water with the balance in natural populations of aquatic flora or fauna in the EPA;
f. Cost effectiveness; and
g. The schedule for implementation.

PROPOSED EVALUATION CRITERIA FOR DESKTOP STUDY

Performance criteria. *Performance criteria are used to evaluate the capability of a technology to contribute to the objectives of the Everglades Protection Project on a consistent basis over the long-term future.*

Economic criteria. *Economic criteria are used to compare the monetary cost of implementing the technology being investigated. Cost projections will be developed for regional level application, and will include design, construction, land acquisition, O&M, etc.*

Environmental criteria. *Environmental criteria are used to compare the environmental effects of implementing the technology being investigated.*

Other criteria. *Categories which may not fit in previous general criteria categories.*

Evaluation to be performed during Subtask 3.2 of the Statement Of Work.

Performance Criteria

Phosphorus removal capability

Phosphorus load and concentration reduction performance will be evaluated at the water quality and hydraulic regimes that bracket the anticipated full-scale design ranges of all flows that are currently scheduled to go to the STAs, including EAA runoff, BMP make-up water, Lake Okeechobee, C-139, C-51 W, L-8, and Ch. 298 Districts.

Maintainability and reliability

Capability or the potential to consistently meet the performance objectives of the EFA using documentation based on previous performance, including but not limited to, provision for back-up treatment capability, availability of replacement components, repair records for equipment used, consistency of performance.

Flexibility - achieving varied levels of phosphorus reduction

Flexibility in terms of its capability to accommodate future changes in performance requirements.

Economic criteria

Capital cost

Capital cost for construction of the alternative treatment technologies, including land, design, equipment, materials, etc.

Operation & maintenance cost

These costs include labor, parts, harvesting expenses, chemicals and other materials, replanting, monitoring costs, etc.

Environmental criteria

None for this criteria, under Subtask 3.2.

Other criteria

Public health & safety

Determine potential impact of technology on the general health and safety of the public. Consider exposure to dangerous chemicals, disease, or unsafe conditions.

Schedule for implementation

The time to implement a fully functioning/performing treatment system, compared to schedules set in State law and proposed modified federal settlement agreement.

Constructability

An evaluation of the constructability of the technology at the full physical scale.

·ument uncertainties. *Document uncertainties for the purpose of identifying what additional arch and/or fact finding must be conducted in order to move toward implementation of any cted technology.*

luation to be performed during Subtask 4.1 of the Statement Of Work.

Performance criteria

Compliance with water quality standards

Documentation of any previous applications of the technology, and a description of treatment process for both phosphorus removal and other parameters.

Robustness

The ability to perform under variable loading rates due to droughts, floods, or potential changes.

Hydropattern performance

Quantity, spatial distribution, and timing of discharge.

Economic criteria

Revenue loss

Loss of revenues from property taxes and the sale of crops. It is assumed that the magnitude of revenue loss is directly related to the land area taken out of production.

Salvage value

Computation of salvage value associated with each technology.

Present worth

Computation of present worth using terms of 20, 30, 40 and 50 years to allow fair comparison of alternatives that may have high capital costs but low annual O&M costs. Loss of revenue and salvage value will also be taken into consideration in this computation.

Environmental criteria

Byproduct generation

Determination of chemicals required, sludge or other byproducts generated.

Downstream water quality

Measure the potential for impacts on downstream water quality and biota resulting from implementation of different treatment technologies with particular attention on the influence on mercury methylation in the Everglades.

Permittability

Description of how wetland impacts and other influences affect the ability to obtain the required permits (i.e. NPDES, state, 402, 404, etc.). Does the technology have a track record, if not, what are the potential problems?

Other criteria

Impact on C&SF Project

Determine consistency with the objectives and authorizations of the Central & South Florida Flood Control Project.

Compliance with EFA

Determination of compliance with the EFA.

Compliance with Federal Consent Decree

Determination of compliance with the Federal Consent Decree.

Document uncertainties. ***Document uncertainties for the purpose of identifying what additional research and/or fact finding must be conducted in order to move toward implementation of any selected technology.***

APPENDIX B

SUPERIOR TECHNOLOGIES DESCRIPTIONS

Superior Technologies Descriptions

Technology	Description	Contact/ Reference
Chemical Treatment in Canal-like Structures[a]	This system uses chemical precipitation, coagulation, flocculation, and sedimentation. Alum and ferric salts are the relevant chemicals. The technology utilizes canal-like structures for rapid mixing, flocculation, and sedimentation. Energy for rapid mixing is supplied by in-stream mixers, which do not impact canal hydraulics. Flocculation is accomplished by slow mixing in longer, wider canals located downstream. Sedimentation is accomplished in still longer and wider downstream canals. The bottom 5 ft of the sedimentation basins are allocated for storage of sludge, which is periodically removed by dredging. Dredged sludge is pumped to storage lagoons and thickened there. The sludge is periodically removed from the lagoons by dredging and applied on dedicated land. Overflow from the lagoon is periodically recycled to the head of the treatment canal. The technology has been tested at bench scale on EAA drainage water. Test results indicate that total P reductions of 70-80% can be attained using ferric salts. Chemical requirements are assumed to be 60 mg/l $Fe_2(SO_4)_3$ for precipitation, 0.35 mg/l for polymer coagulation, and 18 mg/l NaOH for pH control. Detention times for treatment units at design flow are assumed to be 30 seconds for rapid mixing and 11 minutes for flocculation. Canals are sized for a surface overflow rate of 500 gpd/sq ft at design flow and were assumed to be 20 feet deep.	Dr. David Anderson, University of Florida, Institute of Food and Agricultural Sciences
Limerock Treatment[a]	This system removes phosphorus by contacting influent with limestone in engineered systems. Four limerock systems were suggested in the Amendment 2 report, including: ditches or canals dug down to the limestone layer; the same ditches or canals filled with crushed limerock; parallel treatment canals, and cascade systems. The concept to be analyzed in this project is canals filled with crushed limerock. During preparation of Amendment 2, adsorption on limestone was believed to be the primary P removal mechanism, that limestone's P adsorption capacity was limited, and that limestone would have to be regenerated or replaced frequently. More recently, investigators have found that P is removed primarily by calcium phosphate precipitation, and that P removal could continue for extended periods, with layers of calcium phosphate building on top of each other. Under this second assumption, limestone regeneration or replacement is not needed until the accumulated precipitate or accumulated indigenous solids interfere with system hydraulics. This accumulation may take a long time to occur. Investigators have also begun to realize that P precipitation rates can be accelerated if the limestone system follows a process that raises the water pH, for example, a system where photosynthetic effects are strong. Therefore, there is currently a lot of interest in coupling the limestone systems with systems displayin photosynthetic effects.	Dr. K.R. Reddy - University of Florida Dr. William Patrick - Louisiana State University

a - denotes one of the original 16 technologies considered in the Contract C-3051-AZ Amendment 2 report.

Table 2. Superior Technologies Descriptions

Technology	Description	Contact/ Reference
Chemical Treatment/ Sedimentation in Limestone Borrows[a]	This technology involves the use of limestone borrow areas or rock pits as sedimentation basins, with preceding chemical treatment to enhance system P-removal performance. Chemicals such as ferric salts, lime, and polymer are added to the water. The water is then rapid mixed, flocculated, and settled in the borrows. Periodically, sludge is removed from the borrows by dredging, and applied on nearby dedicated land. The Amendment 2 report has estimated that a relatively low surface loading rate of 500 gpd/sq.ft. of settling area would be appropriate for the rock pits. Using this method about 107 acres are required at the basin scale. Overall land requirements were assumed to be two times the settling area. It was assumed that chemical treatment when used in conjunction with limestone borrows is capable of achieving and effluent total P concentration of approximately 0.03 mg/l.	Florida Atlantic University/FIU Joint Center for Environment and Urban Problems
Percolation Ponds[a]	Percolation ponds remove particulate phosphorus by sedimentation. Soluble P is removed by adsorption and chemical precipitation/filtration in the soil profile through which the water percolates. Pilot testing was conducted from November 1989 to March 1990 during the sugar cane milling season. Findings indicated soils have a significant capacity to attenuate phosphorus. The Amendment 2 report estimates design total P effluent concentration of 0.02 mg/l, with a treatment capacity of 900 mgd and a required land area of 360,000 acres to achieve 75 percent P removal.	
Deep Well Injection[a]	Deep well injection is not a treatment process, but a method for the controlled disposal of wastewater from municipal, industrial, and agricultural sources. A deep well injection system typically consists of storage at the ground surface or in tanks or lagoons; pumps and associated equipment; wells for injection into the designated geologic zone; and water quality monitoring wells. The Amendment 2 report indicates that a total well capacity of 500 mgd would be required to achieve 75 percent reduction of P transport from the EAA.	
Aquifer Storage and Recovery[a] (ASR)	ASR technology uses an engineered system to inject water above or into sub-surface sources of potable water supplies, with by gravity flow or pumping. The water is later recovered for beneficial use. A large scale demonstration project was performed to evaluate ASR. Single well systems using 14 inch and 24 inch wells were evaluated. An ASR system was installed in the Upper Floridan Aquifer. Only 70 percent of the P injected into the reservoirs was recovered. The remaining 30 percent appeared to have been removed by adsorption or precipitation on limestone.	
Water Quality/Supply Diversion Plan[a] (WQSD)	The WQSD plan proposes to reduce P loadings by diverting a portion of the runoff from the EAA to the coastal areas for recharging the surficial aquifer and for meeting other demands for water supply. To offset the reduced flow to the water conservation areas (WCAs), the plan recommends reducing or eliminating current releases from the WCAs to the lower East Coast. A basic assumption of the WQSD plan is that water quality of runoff from the EAA generally meets or exceeds that water quality requirements for sources of potable water.	

a - denotes one of the original 16 technologies considered in the Contract C-3051-AZ Amendment 2 report.

Table 2. Superior Technologies Descriptions

Technology	Description	Contact/ Reference
Algal Filtration[a]	A proprietary process, the Algal Turf Scrubber (ATS) system was proposed for treating flows from the EAA. A 50 foot test section reduced P from an average of 53 ppb to 44 ppb (17 percent). The proposed prototype (22 feet by 750 feet by 1 foot deep) would treat 220 gpm per flow-way. Algal harvest would be at 7 to 10 day intervals. The harvester is a vehicle riding the berms using suction to remove the algae. The periphyton filter is a variation on the theme.	Kyle Jensen, Tom DeBusk
Nutrient Management System[a]	A proprietary system, it has been used primarily to treat dairy barn wastes. The system provides a sequence of solids separator, bioreactor, optional chemical feed, an ecoreactor (wetland) and an optional georeactor. Bion Technologies has been conducting pilot studies near the Hillsborough Canal for the Sugar Cane Growers Cooperative of Florida to demonstrate the performance of the NMS system using EAA drainage water. The pilot system consists of a 3.4 acre pond treating an average flow of 1.73 mgd. Data obtained over a 30-month period show that on average an influent P concentration of 116 ppb was reduced to 47 ppb.	
Ozone Treatment[a]	A proprietary system that involves treatment with ozone, ultraviolet light, possibly activated carbon and proprietary blends of insoluble inorganic catalytic agents. Wastewater effluent tests removed P from 5.3 mg/ L to 0.35 mg/ L.	
Sediment Dredging[a]	Sediment in drainage canals may be dredged to reduce possibility of P re-entry into the water. Further study was proposed to determine effectiveness, however based on preliminary estimates, 14,000 acres of disposal area would be required for the 120 miles of District canals. Inclusion in a BMP farm program may be considered.	
Wetlands[a]	Constructed wetland treatment systems (also known as stormwater treatment areas [STAs] are currently proposed to treat discharges from the EAA. Phosphorous is taken up by wetland vegetation and is stored in the muck soils. Flow passing through the STA is collected in an effluent canal and is pumped out of the treatment system directly into a conservation area or into a receiving canal. Approximately 32,000 acres of wetland are proposed for the STA's. Design is based on removal to 50 ug/ L, however preliminary operating experience indicates the possibility of attaining 30 ug/ L effluent P.	
Managed Wetlands[a]	In the Managed Wetland technology, influent is pumped into a chemical treatment facility consisting of chemical addition, rapid mixing, flocculation, and solids separation in settling tanks. The chemical treatment is added upstream to provide a mechanism for controlling the total phosphorus load to the wetlands and for increasing the performance and reliability of the overall treament system. By adding the chemical treatment step ahead of the wetlands, a percentage of the phosphorus is removed prior to the flow being introduced into the wetlands, thus reducing wetland area requirements. Removals to less than 50 ppb are documented.	

a - denotes one of the original 16 technologies considered in the Contract C-3051-AZ Amendment 2 report.

Table 2. Superior Technologies Descriptions

Technology	Description	Contact/ Reference
Chemical Treatment/ Direct Filtration[a]	This system employs chemical precipitation, coagulation, flocculation and downflow filtration. Potential chemicals include alum and ferric salts. Filters consist of coarse activated carbon overlying anthracite coal overlying fine sand. Spent backwash is routed to settling ponds, and supernatant returned to the head of the plant. Solids are removed from the settling ponds periodically, and applied on dedicated land. The technology appears capable of achieving 80-95+ % P removal. The Wahnbach Reservoir plant in Germany (capacity 113 mgd) has been reducing P from 60-210 ug/L to 5 ug/L for many years. The Wahnbach plant uses a ferric sulfate dose of 4 to 10 mg/L. Maximum filtering rates are 5 gpm/sq ft.	
Barge Treatment[a]	This proprietary treatment system is situated on board barges located in canals. Physical straining and reactions with iron appear to be the phosphorus-removal mechanisms. The treatment system has seven stages. The first stage removes large solids (vegetation, etc.) which are burned in onboard incinerators. Stages 2 through 7 pass the water through iron screens with progressively smaller openings, starting from 100 microns and decreasing to 1 micron. There is a DC electrical component to the process. It is assumed the current promotes dissolution of the iron screen, and the dissolved iron subsequently reacts with phosphorus. Process components are replaced every 30 days and shipped offsite for regeneration. Laboratory tests removed P from 1 mg/ L to as low as 0.01 mg/ L effluent.	
Overland Flow[a]	The process involves sheet flow over a vegetated surface. Major P-removal mechanisms include sorption, precipitation,, and plant uptake. The process is a managed process, as the vegetation is periodically removed by mowing. The technology has principally been applied to municipal waste water treatment. A typical flow length is about 150 feet, with an application rate of about 16 gallons per hour per foot of width. Removal rates of about 50% have been reported with municipal wastewaters.	
Chemical Treatment/ High-Rate Settling	Chemical treatment using precipitation, coagulation, flocculation and settling. Potential chemicals include alum and ferric salts. Sedimentation tanks are equipped with lamella settlers or tube settlers and mechanical sludge withdrawal. Overflow rates are very high compared to rates obtained in conventional gravity settlers, and thicker sludges are also developed. Thickened sludge is applied on dedicated land. The technology appears capable of achieving 80 to 90 percent P removal. Units up to 15 mgd have been constructed.	Infilco Degremont Inc., Mirzejewski, et al (1990), Parkson Company
Chemical Treatment/ Dissolved-Air Flotation/ Filtration	This process involves precipitation, rapid mixing, flocculation, and subsequent solids separation by flotation and filtration. The flotation and filtration steps are accomplished in one vessel. Flotation is achieved by dissolving air into recycled process effluent under pressure. The recycled effluent passes through a pressure-reducing valve and is blended with the flocculated influent. Dissolved air comes out of solution as tiny bubbles, which adhere to the floc and make them buoyant. The floc-bubble agglomerates rise to the surface, and are skimmed off, then pumped to disposal on agricultural fields or dedicated land. The underflow passes directly to a multi-media filter. This technology appears capable of 80-95+ % P removal. Dissolved-air flotation DAF) in water treatment is common in Europe, not much used in the US. A 1978 article indicated 16 DAF plants operating in Finland, Norway, and Sweden, with capacities up to 20 mgd. The size of largest current individual unit is a 70-foot diamter tank, which has a treatment capacity of 14.5 mgd.	Krofta and Wang (1993)

a - denotes one of the original 16 technologies considered in the Contract C-3051-AZ Amendment 2 report.

Table 2. Superior Technologies Descriptions

Technology	Description	Contact/ Reference
Chemical Treatment/ Adsorption Clarification/ Filtration	This system employs chemical precipitation, rapid mixing, flocculation, upflow (adsorption) clarification, and filtration. Potential chemicals include alum and ferric salts. The upflow clarifier has a bed of high-density plastic chips held just below the surface by a restraining grid. Water is flocculated as it passes through the bed, which also retains most of the solids. The bed is cleaned by air scouring. Polishing is provided by multi-media filters. Backwash water from the adsorption clarifier and the polishing filter are sent to settling ponds. Sludges are periodically removed from the ponds by dredges and applied on dedicated land. Pond supernatant is returned to the head of the plant. This technology appears capable of 80-95+ % P removal. The size of largest current individual units is approximately 20 mgd.	Neptune Microfloc, Neethling, et al (1991).
Chemical Treatment/ High-Rate Two-Stage Direct Filtration	Two stages of pressure filtration are used to filter chemically treated water. The first stage is a roughing filter, using a 5 mm gravel, 48 in deep. The second stage is a polishing filter using 1.3 mm anthracite, 52 in deep. At Seattle's Green Lake (a low-turbidity, low-TOC water), alum and cationic polymer doses of 10 and 1 mg/L, respectively, reduced P from 50-150 to 5 ppb. Filter run times between backwash cycles exceeded 24 hrs in length. About half of the metal salt and half of a cationic polymer were injected into the feed of the roughing filter, and the remainder into the feed of the polishing filter. Design rates were 10 gpm/sq ft and 6 gpm/sq ft for the roughing filter and polishing filter, respectively, although good performance was obtained at twice these rates. Plant residues (spent backwash) from an Everglades treatment system would be routed to settling ponds. Supernatant would be returned to the head of the plant. Solids would periodically be removed from the settling ponds by dredges and applied on dedicated land. This process appears capable of 80-95+% P removal. It was tested at pilot scale (15 gpm) in Seattle. A full-scale plant (3 mgd) was designed but not built because of lack of funding.	Michael Zafer, et al ( )
Chemical Treatment/ High-Rate Upflow Magnetic Direct Filtration	This system uses chemical precipitation, coagulation, and upflow filtration. A magnetic field is used to immobilize the upper few inches of the ferromagnetic filtering medium, which has a wide size distribution (0.5 to 5 mm). Immobilization of the upper layers prevents the filter medium from fluidizing, even at extremely high filtering rates (up to 15 gpm/sq ft). Compatible with alum or ferric iron treatment. Plant residues (spent backwash) from an Everglades treatment system would be routed to settling ponds. Supernatant would be returned to the head of the plant. Solids would periodically be removed from the settling ponds by dredges and applied on dedicated land. This system appears capable of 95+ % P removal. The system was tested at bench scale (0.8 gpm) in Bulgaria. Very high suspended solids removals (>99 percent) were obtained from heavily laden wastewaters (up to 300 mg/L) at overflow rates as high as 15 gpm/sq ft. Data from full-scale operating units were not found in the literature search.	Zvezdov (1993)

a - denotes one of the original 16 technologies considered in the Contract C-3051-AZ Amendment 2 report.

Table 2. Superior Technologies Descriptions

Technology	Description	Contact/ Reference
Iron-Coated Sand Filters	Phosphate-bearing water is passed through filters using iron oxide-coated sand media. The phosphate is adsorbed. The media is regenerated by desorbing the phosphate with acid. However, the sparingly soluble iron oxide does not dissolve, but remains on the media. The acid regenerant can be reused many times, and becomes increasingly concentrated in phosphate. Ultimate phosphorus removal is obtained by precipitating it from the regenerant with lime or iron. Backwash water is sent to a settling pond. Sludges are periodically removed from the pond and applied on dedicated land. Pond supernatant is returned to the head of the plant. Lime sludges are disposed of directly on dedicated land. This system has been tested at pilot scale for metals removal, but not for phosphorus removal. Data from full-scale operating units were not found in the literature search.	Edwards and Benjamin (1989)
Electro-Coagulation/ Solids Separation	Phosphate-bearing water is passed through an annular electrolytic cell. An aluminum or iron anode surrounds an axially centered cathode. The water passes between the two. Under the impetus of direct current, the anode slowly dissolves, releasing aluminum or iron ions into solution. These ions precipitate phosphate and also form insoluble hydroxides, which are good coagulants. The precipitated solids and coagulated solids are then removed in any convenient solids separation device. The sludges are disposed of on dedicated land. This technology appears capable of 80-95% P removal. It is commercially available. Maximum flow capacities of individual units are 1,000 gpm.	CURE International, Ltd., Andco Corp.
Adsorption on Activated Alumina	Phosphate-bearing water is passed through beds of activated alumina. Dissolved phosphate is adsorbed. Particulate phosphate is filtered out. The bed is backwashed with effluent when headlosses become too high. Spent backwash is settled in ponds. When the alumina's P-removal capacity is exhausted, it is regenerated, usually with caustic. Phosphate is precipitated from the spent regenerant by lime treatment. Backwash water is sent to a settling pond. Sludges are periodically removed from the pond and applied on dedicated land. Pond super-natant is returned to the head of the plant. Regenerant sludges are disposed of directly on dedicated land. This process appears capable of 85-95 % P removal. It has been tested at bench and pilot scale.	Ames and Dean (1970), Yee (1966).
Chemical Treatment/ Microfiltration	Phosphate-bearing water is contacted with a metal salt, typically ferric chloride or ferric sulfate, precipitating the phosphate. The reacted water is flows through a pressure vessel containing tubular membranes. The water passes from the outside to the inside of the membranes , while solids are trapped on the outside of the membranes. Periodically the trapped solids are air-blown from the membranes and flushed to waste with influent. Backwash water is sent to a settling pond. Sludges are periodically removed from the pond and applied on dedicated land. Pond supernatant is returned to the head of the plant. The menbrane is cleaned periodically with chemicals. Spent chemicals are drummed and disposed of off site. This technology appears capable of 95+ % P removal. A system of 20 mgd capacity will be installed soon in France.	Earl Shannon

a - denotes one of the original 16 technologies considered in the Contract C-3051-AZ Amendment 2 report.

Table 2. Superior Technologies Descriptions

Technology	Description	Contact/ Reference
Floating Plants	Floating plants have their photosynthetic parts at or just above the water surface with the roots extending down into the water column. Two widely used aquatic macrophyte species are water hyacinth and duckweed. P removal from aquatic macrophyte systems is due to plant uptake, microbial immobilization into detrius plant tissue, retention by the underlying sediments, and precipitation in the water column. Plants are harvested to maximize nutrient removal. P removal rates for water hyacinths in seven Florida wastewaters averaged 0.11 gr/sq m.day, with a range of 0.05 to 0.28 gr/sq m.day. Influent P averages 14.1 mg/L. Effluent P concentrations from 0.3 to 1.0 mg/L were obtained.	Tom DeBusk, Ramesh Reddy
Submerged Vegetation/ Limerock	P-laden runoff is fed to a submerged macrophyte-dominated wetland. Macrophyte and periphyton photosynthesis raise the water pH, precipitating P as calcium phosphate. The elevated-pH water is fed to a limerock bed, where more P precipitates on the limerock surface. Performance fluctuates diurnally, with best performance during daylight high-pH hours. The limerock modulates water quality swings.	Tom DeBusk
Dolimitic Limerock/Fixed Film Bioreactor	P-laden water is treated in three reactors in series. Each reactor contains a layer of limerock underlain by lava rock. Reactors 1 and 3 are aerobic, Reactor 2 is anaerobic. The limerock precipitates P and raises the pH. Nitrification occurs in first and third reactors, denitrification in the second reactor. The lava rock provides micronutrients and a surface for microorganism growth. Sludge is collected in sumps below each reactor for disposal. Effluent can be recycled to improve water quality. A 600 gpm system is scehduled for start-up in the Bahamas in June 1996.	BIOCHEM Technologies.
Periphyton Stormwater Treatment Areas (PSTA)	Technology is proposed as an improvement or enhancement of existing contructed wetlands. It is not a stand alone technology, it is intended to follow traditional STA's as a second stage of treatment. The process consists of the removal of soil/substrate to the limestone underneath. The purpose is to create an environment that will not support macrophyte growth, but will support periphyton growth. Phosphorous removal is through periphyton uptake during the growth process. A key component is using a periphyton community that exists in marl communities only. The operator has the option of harvesting during the dry season, but it is not mandatory. After dry periods, periphyton communities typically reestablish within 24 hours of a rain event. No experimental data is available. A pilot project (50 to 100 acres) is scheduled to be constructed in Frog Pond in Taylor Slough by the end of 1996. Optimum water depth for the system is estimated at between 0 and 2 feet, with a maximum depth of 3 to 4 feet. Temperature and light will effect P removal.	Ron Jones, FIU
Low-Intensity Chemical Dosing of STA's	Small doses of ferric iron are added directly to the constructed wet-lands influent to precipitate soluble P and help coagulate the chemically precipitated P and naturally occurring particulate P. No rapid mixing, flocculation, or settling tanks are used. The constructed wetlands act as settling basins and filters. Chemical precipitation provides an additional mechanism for P removal, may improve particulate P-removal capability, and may enhance P-retention capability of the sediments. This concept has been used in Belgium, along the Rhine River, and in Minnesota on lake water. It has not been used with constructed wetlands.	William Walker, Bob Kadlec

a - denotes one of the original 16 technologies considered in the Contract C-3051-AZ Amendment 2 report.

APPENDIX C

SUPERIOR TECHNOLOGIES ADVANTAGES VS DISADVANTAGES

Superior Technologies Advantages vs. Disadvantages

Technology	Advantages	Disadvantages
Chemical Treatment in Canal-like Structures[a]	Low initial cost, in existing structures. Relatively low land requirements.	P removal performance in EAA ditches and canals is not be documented. Few process controls relative to conventional treatment systems. Possible failure as the result of scouring of accumulated sludge during peak flows and/or sludge uplifting by anaerobically generated gasses. at any time. Generates sludge for disposal. Chemically induced changes to water chemistry need to be evaluated for possible impacts to downstream systems.
Limerock Treatment[a]	Uses native limerock material. Simple operation with low O&M requirements.	Little reliable data available for design of full-scale plants. Canal segments nearest influent pump stations may need periodic flushing or replacement to remove accumulated indigenous solids.
Chemical Treatment/ Sedimentation in Limestone Borrows[a]	Many limestone borrows already exist and 300 to 400 acres of additional quarries are constructed annually. Stormwater retention in rock pits already practiced in South Florida's urban areas.	Permitting could require exemption from current FDEP regulations. Sludge removal and disposal needed periodically. Potential for contaminating contiguous aquifer. Economically feasible only for drainage area in immediate proximity to the rock pit.
Percolation Ponds[a]	Proven technology in Florida. Low O&M requirements. Capable of achieving low effluent P concentrations.	Shallow caprock requires horizontal percolation to achieve required P removal. Low adsorptive capacity of the EAA muck soils requires prohibitively large levees and pond areas to treat high volume waste streams.
Deep Well Injection[a]	High P removal capability. Demonstrated technology. Low land requirements. Low O&M requirements.	Injected water is lost for future use. Complicated and lengthy permitting process. Adverse impact on hydroperiod.
Aquifer Storage and Recovery[a] (ASR)	Proven technology. Low land requirements. Low O&M requirements. Potentially significant benefits to water resource management in the region and hydroperiod in the WCAs and ENP.	P removal capability limited. P removals of 30 percent have been documented. However, this will not achieve P removal goals. Complicated and lengthy permitting process to obtain aquifer exemption.

a - denotes one of the original 16 technologies considered in the Contract C-3051-AZ Amendment 2 report.

Table 3. Superior Technologies Advantages vs. Disadvantages

Technology	Advantages	Disadvantages
Water Quality/Supply Diversion Plan[a] (WQSD)	Reduction of phosphorus by diversion of runoff to urban coastal areas for water supply uses.	Ability to divert sufficient runoff to reduce P significantly is questionable. Flow reduction to WCAs may not be offset by reduction in withdrawals from the WCAs. Potential for flooding in the EAA during peak flow conditions and high canal levels in the LEC.
Algal Filtration[a]	Natural treatment process. Potential to achieve very low effluent P concentrations based on pilot plant results. Land area requirements lsignificantly ess than for wetlands.	P removal to low levels has not been demonstrated with agricultural drain water. Proposed methods for sludge processing, and marketing/ disposal have not been tested in the field at large scale.
Nutrient Management System[a]	Enhanced natural treatment system. Compatible with farm operations and pretreatment facilities at some sugar mills. Less land required than for wetlands	Proprietary technology--treatment process information not available. Higher O&M than for wetlands. Phosphorous removals on an average influent concentration of 116 ppb was reduced to 47 ppb. P removal capability is limited.
Ozone Treatment[a]	Commercially available treatment modules. Low land requirements.	Ozone does not remove phosphorus itself. If it enhances other P-removal processes, the mechanism is unclear. P removal performance not demonstrated on wastewaters with low P concentrations. Proprietary technology--treatment process information unavailable. No full scale systems in operation. Prohibitive capital costs. Process is energy intensive.
Sediment Dredging[a]	One-time only treatment process. Implementation can occur quickly. No recurring O&M requirements. Requires that only a small amount of agricultural land be taken out of production for 1 year.	Phosphorus reduction benefits not defined. Potential environmental impacts associated with disposal of dredged materials.
Wetlands[a]	Natural treatment process. Demonstrated technology. Treatment benefits other than P removal (N, etc.). Positive effects on hydroperiod.	Large land area is required for implementation of this technology.

a - denotes one of the original 16 technologies considered in the Contract C-3051-AZ Amendment 2 report.

Table 3. Superior Technologies Advantages vs. Disadvantages

Technology	Advantages	Disadvantages
Managed Wetlands[a]	Capable of achieving lower effluent P concentrations than wetlands alone. Increased flexibility and reliability over wetlands due to process control. Less land area required than with wetlands alone. Positive effects on hydroperiod.	Large amount of agricultural land must be taken out of production. Chemicals may have possible adverse affects on downstream water quality. Requires sludge processing and disposal. Higher O&M requirements than with wetlands alone.
Chemical Treatment/ Direct Filtration[a]	Proven technology. Capable of achieving very low effluent P concentrations. Similar application of technology on stormwater runoff in Europe. Low land area requirements. Process control provides for a high degree of treatment performance reliability.	Chemical dosage may impact effluent water chemistry. High labor requirements. Chemicals may have possible adverse affects on downstream water quality. Requires sludge processing and disposal.
Barge Treatment[a]	Potential for P removal during dry weather and low flow conditions.	Proprietary technology--treatment process information unavailable. Technical feasibility in question. Technology appears impractical. No treatment units in operation at any scale. Very high O&M requirements. Requires sludge treatment and disposal.
Overland Flow[a]	Natural treatment system. Proven technology, capable of removing P from wastewater treatment plant effluents.	No major advantages over wetlands for P removal capability, land area requirements, or capital cost. High O&M requirements.
Chemical Treatment/ High-Rate Settling	Lamella and/or tube settlers can be operated at 10 gpm/ sq ft, much higher than the overflow rates for conventional sedimentation basins (0.5 to 1.0 gpm/sq ft). Use of high rate settlers reduces land area requirements. Use of a special reactor increases sludge density, reducing sludge volume, minimizing dewatering and disposal problems. Mechanical sludge withdrawal allows continuous operation and eliminates concerns about scouring of accumulated sludge.	Maximum capacity of currently available commercial units is about 15 mgd, requiring many parallel units to handle large flows. Capital costs may exceed costs of in-canal treatment. Chemical dosage may impact effluent water chemistry. Chemicals may have possible adverse affects on downstream water quality. Requires sludge processing and disposal.

a - denotes one of the original 16 technologies considered in the Contract C-3051-AZ Amendment 2 report.

Table 3. Superior Technologies Advantages vs. Disadvantages

Technology	Advantages	Disadvantages
Chemical Treatment/ Dissolved-Air Flotation/Filtration	Dissolved-air flotation devices can be operated at 2 to 5 gpm/sq ft. May be more effective in removing algae than sedimentation processes. High-rate devices reduces required land area. Floated sludge is typically denser than gravity-settled sludge, reducing sludge dewatering and disposal problems. Mechanical sludge withdrawal equipment allows continuous operation and eliminates concerns about scouring of accumulated sludge.	Limited US data. Recycle pressurization increases power costs. Chemicals may have possible adverse affects on downstream water quality. Requires sludge processing and disposal..
Chemical Treatment/ Adsorption Clarification/ Filtration	The clarifier can be operated at overflow rates of 8 to 12 gpm/sq ft, reducing land area requirements. It removes the bulk of the solids, allowing filter runs between backwash cycles to be extended. System is capable of very high P removals.	Limited data on use of adsorption clarifier in waters with high chemical requirements. Solids separation capability of clarifier may be insufficient to provide needed solids removal. Requirement for clarifier plus filter may make combined system too costly. Chemicals may have possible adverse affects on downstream water quality. Requires sludge processing and disposal.
Chemical Treatment/High-Rate Two-Stage Direct Filtration	Very high filtration rates should be obtainable in commercially available equipment. Very high P removal capability.	No full-scale data for the two-stage filter. Requirement for two filters tends to offset advantages of high rate operation. Chemicals may have possible adverse affects on downstream water quality. Requires sludge processing and disposal.
Chemical Treatment/High-Rate Upflow Magnetic Direct Filtration	The coarse-to-fine flow configuration provides high solids storage capacity and very good suspended solids (and particulate P) removal. The use of high-rate filtration reduces equipment size and cost, and land requirements.	Demonstrated only at bench scale. Getting data may be a problem. Chemicals may have possible adverse affects on downstream water quality. Requires sludge processing and disposal.
Iron-Coated Sand Filters	Possibly high P removal in low-P waters. Minimal iron requirement (iron remains on sand) and sludge production, in contrast to direct filtration with iron salts, where reagent demand is continuous and all iron is converted to sludge.	Not demonstrated for P removal. No full-scale systems. P must still be precipitated from concentrated regenerant to achieve ultimate P removal. Chemicals may have possible adverse affects on downstream water quality.

a - denotes one of the original 16 technologies considered in the Contract C-3051-AZ Amendment 2 report.

Table 3. Superior Technologies Advantages vs. Disadvantages

Technology	Advantages	Disadvantages
Electrocoagulation/ Solids Separation	The technology differs from conventional precipitation/coagulation in that it uses electricity to introduce the chemicals into the water. Vendors claim that electrochemical treatment requires less chemicals, produces a better-settling floc, and produces less sludge and a more inert sludge than conventional chemical coagulation/precipitation process.	Individual unit hydraulic capacity possibly as low as 500 gpm , requiring many parallel units to handle flow. Downstream clarifiers and possibly filters still needed. Chemicals may have possible adverse affects on downstream water quality. Requires sludge processing and disposal.
Adsorption on Activated Alumina	Technology may be effective in removing high percentages of P from low-P water. Regeneration may be infrequent because of low P concentration in the water. Sludge production may be low relative to production in conventional treatment.	Lack of full-scale data on low-P waters. High fluoride may interfere. P must still be precipitated from concentrated regenerant to achieve ultimate P removal. Not used much in wastewater treatment, indicating limited acceptance.
Chemical Treatment/ Microfiltration	Membrane pores are very small, typically 0.2 microns. Therefore solids separation efficiencies are very high, with effluent total suspended solids typically below 1 mg/L. P leakage is confined to soluble P.	Microfilters tend to be more expensive than conventional filters, particularly when flow rates are high. Membranes are expensive and have a finite life. Pumping costs are higher than pumping costs for granular media filters, because microfilters are operated under pressure. Chemicals may have possible adverse affects on downstream water quality. Requires sludge processing and disposal.
Floating Plants	High P uptake rates relative to STAs ., hence lower land requirements. Water hyacinths have higher uptake rates than duckweed. Duckweed is more cold tolerant, more pest resistant, easier to harvest, has higher nutrient contents.	Capability to achieve low P levels in agricultural drainage may not have been demonstrated. Management (plant harvesting) required. Harvesting costs often exceed sale value of harvest. Susceptible to pests (water hyacinth weevil).
Submerged Vegetation/ Limerock	Potentially low-cost process using natural materials. Passive system means low labor requirements. Pilot testing with agricultural runoff achieved 5 to 10 ppb P near end of experiment. Latest evidence indicates P removal on limestone is predominantly by precipitation, rather than by adsorption as previously believed. This means limestone does not become exhausted after initial coverage and therefore needs replacement infrequently.	Laboratory scale testing, minimal test data available. Uncertainties about scale up and time between limestone replacement. Additional research required to assess balance between macrophyte and periphyton communities and long term effects on limerock.

a - denotes one of the original 16 technologies considered in the Contract C-3051-AZ Amendment 2 report.

Table 3. Superior Technologies Advantages vs. Disadvantages

Technology	Advantages	Disadvantages
Dolimitic Limerock/Fixed Film Bioreactor	The system uses naturally occurring low cost materials. The vendor claims 95 % P removal in one pass in fresh and salt-water aquariums, initial P concentration 5 mg/l. Vendor claims P removals to 15 - 20 ppb. Vendor claims high throughput rates (20 gpm/sq ft) and effluent suitable for aquaculture. Passive system. Vendor claims a long service life - up to 50 years. May be able to produce a by-product that is marketable by using aquaculture.	No data on agricultural drainwater. Little consideration appears to have been given to sludge dewatering and disposal. System will probably work best as a farm-level technology to treat low volume high concentration water. Uncertainties regarding scaling up the technology. May remove essential trace elements through precipitation. Flow equalization needed. Useful life of media uncertain.
Periphyton Stormwater Treatment Areas (PSTA)	Passive system. Natural system. No storage reservoirs needed, system can acclimate to flooding and drought conditions. Advocated as add-on to constructed wetlands.	Research needed to substantiate P removal. Uncertain amount of earthwork required to strip to bedrock. Potentially high requirements to maintain bedrock substrate. Uncertain land area requirements in place of or in addition to constructed wetlands. More research needed to demonstrate that periphyton communities can be maintained at nutrient levels that will be experienced.
Low-Intensity Chemical Dosing of STAs	Increases wetland P-removal capability. Adds flexibility and reliability to wetland technology. Low-level iron addition adds negligible costs and sludge production.	Possible changes to effluent water chemistry should be considered. The extent and effect of residual accumulation is unknown. Operating system experience is limited.

a - denotes one of the original 16 technologies considered in the Contract C-3051-AZ Amendment 2 report.

APPENDIX D

RESULTS OF SCREENING PROCESS

Table D-1. Summary of Phosphorous Removal Ratings

Alternative Technology	Phosphorous Removal Rating			
	150 - 50 ppb	150 - 30 ppb	150 - 10 ppb	50 - 10 ppb
Chemical Treatment/In-Canal Sedimentation	7			
Limerock Treatment	8			
Sedimentation in Limestone Borrows	7			
Percolation Ponds	4			
Algal Filtration	5	6	8	5
Nutrient Management Systems	3			
Sediment Dredging	10			
Wetlands	1	3		
Managed Wetlands	1	2		
Chemical Treatment/Direct Filtration	1	1	3	1
Overland Flow	10			
Chemical Treatment/High Rate Settling	1	2		2
Chemical Treatment/Dissolved-Air Flotation/Filtration	1	1	2	
Chemical Treatment/Adsorption - Clarification/Filtration	1	1	2	1
Chemical Treatment/High-Rate Two-Stage Filtration	1	1	2	1
Chemcial Treatment/High Rate Upflow Magnetic Direct Filtration	4	5	7	6
Iron-Coated Sand Filters	5	7		6
Electrocoagulation	7	8		7
Chemical Treatment/Microfiltration	1	1	1	1
Floating Plants	10			
Submerged Vegetation Limerock	3	5	7	5
Dolimitic Limerock/Fixed Film Bioreactor	8	9		
Periphyton STA's				5
Low-Intensity Chemical Dosing of STA's	1	2		

Table D-2. Summary of Confidence of Sustained Performance

Alternative Technology	Confidence of Sustained Performance
Chemical Treatment/In-Canal Sedimentation	PROVEN
Limerock Treatment	UNPROVEN
Sedimentation in Limestone Borrows	UNPROVEN
Percolation Ponds	PROVEN
Algal Filtration	UNPROVEN
Nutrient Management Systems	PROVEN
Sediment Dredging	
Wetlands	PROVEN
Managed Wetlands	PROVEN
Chemical Treatment/Direct Filtration	PROVEN
Overland Flow	
Chemical Treatment/High Rate Settling	PROVEN
Chemical Treatment/Dissolved-Air Flotation\Filtration[a]	PROVEN
Chemical Treatment/ Adsorption - Clarification/Filtration	PROVEN
Chemical Treatment/High-Rate Two-Stage Filtration	UNPROVEN
Chemical Treatment/High Rate Upflow Magnetic Filtration	UNPROVEN
Iron-Coated Sand Filters	UNPROVEN
Electrocoagulation	UNPROVEN
Chemical Treatment/Microfiltration	PROVEN
Floating Plants	
Submerged Vegetation Limerock	UNPROVEN
Dolimitic Limerock/Fixed Film Bioreactor	UNPROVEN
Periphyton STA's	UNPROVEN
Low-Intensity Chemical Dosing of STA's	PROVEN

Table D-3. Summary of Flexibility Ratings

Alternative Technology	Flexibility	
	Flexible or Not	Technology Rating
Chemical Treatment/In-Canal Sedimentation	F	3
LimerockTreatment	L	8
Sedimentation in Limestone Borrows	F	3
Percolation Ponds	L	8
Algal Filtration	L	8
Nutrient Management Systems	L	7
Sediment Dredging	N/A	N/A
Wetlands	L	8
Managed Wetlands	F	5
Chemical Treatment/Direct Filtration	F	3
Overland Flow	N/A	N/A
Chemical Treatment/High Rate Settling	F	3
Chemical Treatment/Dissolved-Air Flotation\Filtration	F	2
Chemical Treatment/ Adsorption - Clarification/Filtration	F	3
Chemical Treatment/High-Rate Two-Stage Filtration	F	3
Chemcial Treatment/High Rate Upflow Magnetic Direct Filtration	F	3
Iron-Coated Sand Filters	L	6
Electrocoagulation	F	3
Chemical Treatment/Microfiltration	F	3
Floating Plants	N/A	N/A
Submerged Vegetation Limerock	L	7
Dolimitic Limerock/Fixed Film Bioreactor	L	8
Periphyton STA's	L	8
Low-Intensity Chemical Dosing	L	6

F = Flexible L = Limited Flexibility

Table D-4. Summary of Capital Cost Ratings

Alternative Technology	Capital Cost Rating			
	150 - 50 ppb	150 - 30 ppb	150 - 10 ppb	50 - 10 ppb
Chemical Treatment/In-Canal Sedimentation	1			
Limerock Treatment	3			
Sedimentation in Limestone Borrows	2			
Percolation Ponds	10			
Algal Filtration	4	5	6	4
Nutrient Management Systems	2			
Sediment Dredging				
Wetlands	2	3		
Managed Wetlands	3	4		
Chemical Treatment/Direct Filtration	2	3	3	3
Overland Flow				
Chemical Treatment/High Rate Settling	3	4		3
Chemical Treatment/Dissolved-Air Flotation\Filtration	2	3	3	3
Chemical Treatment/Adsorption - Clarification/Filtration	2	3	4	4
Chemical Treatment/High-Rate Two-Stage Filtration	3	4	4	4
Chemical Treatment/High Rate Upflow Magnetic Direct Filtration	2	3	3	3
Iron-Coated Sand Filters	2	3		3
Electrocoagulation	10	10		10
Chemical Treatment/Microfiltration	5	8	5	5
Floating Plants				
Submerged Vegetation Limerock	1	1	2	1
Dolimitic Limerock/Fixed Film Bioreactor	5	8		
Periphyton STA's				4
Low-Intensity Chemical Dosing of STA's	2	3		

Table D-5. Summary of O&M Cost Ratings

Alternative Technology	O&M Cost Rating			
	150 - 50 ppb	150 - 30 ppb	150 - 10 ppb	50 - 10 ppb
Chemical Treatment/In-Canal Sedimentation	4			
Limerock Treatment	3			
Sedimentation in Limestone Borrows	4			
Percolation Ponds	4			
Algal Filtration	4	5	6	4
Nutrient Management Systems	3			
Sediment Dredging				
Wetlands	2	2		
Managed Wetlands	3	4		
Chemical Treatment/Direct Filtration	5	6	7	6
Overland Flow				
Chemical Treatment/High Rate Settling	4	5		5
Chemical Treatment/Dissolved-Air Flotation/Filtration	6	7	8	8
Chemical Treatment/Adsorption - Clarification/Filtration	5	6	7	6
Chemical Treatment/High-Rate Two-Stage Filtration	6	7	8	8
Chemical Treatment/High Rate Upflow Magnetic Direct Filtration	5	6	7	7
Iron-Coated Sand Filters	3	4		4
Electrocoagulation	10	10		10
Chemical Treatment/Microfiltration	10	10	10	10
Floating Plants				
Submerged Vegetation Limerock	2	2	2	2
Dolimitic Limerock/Fixed Film Bioreactor	3	4		
Periphyton STA's				3
Low-Intensity Chemical Dosing of STA's	2	3		

Table D-6. Summary of Public Health and Safety Ratings

Alternative Technology	Public Health	
	(Chemical Usage?)	Technology Rating
Chemical Treatment/In-Canal Sedimentation	yes	3
Limerock Treatment	no	1
Sedimentation in Limestone Borrows	yes	3
Percolation Ponds	no	1
Algal Filtration	no	1
Nutrient Management Systems	yes	3
Sediment Dredging		N/A
Wetlands	no	1
Managed Wetlands	yes	3
Chemical Treatment/Direct Filtration	yes	3
Overland Flow		N/A
Chemical Treatment/High Rate Settling	yes	3
Chemical Treatment/Dissolved-Air Flotation\Filtration	yes	3
Chemical Treatment/ Adsorption - Clarification/Filtration	yes	3
Chemical Treatment/High-Rate Two-Stage Filtration	yes	3
Chemical Treatment/High Rate Upflow Magnetic Direct Filtration	yes	3
Iron-Coated Sand Filters	yes	3
Electrocoagulation	no	3
Chemical Treatment/Microfiltration	yes	3
Floating Plants		N/A
Submerged Vegetation Limerock	no	1
Dolimitic Limerock/Fixed Film Bioreactor	no	1
Periphyton STA's	no	1
Low-Intensity Chemical Dosing of STA's	yes	2

Table D-7. Summary of Schedule For Implementation Ratings

Alternative Technology	Schedule for Implementation Rating
Chemical Treatment/In-Canal Sedimentation	5
Limerock Treatment	5
Sedimentation in Limestone Borrows	5
Percolation Ponds	5
Algal Filtration	5
Nutrient Management Systems	5
Sediment Dredging	N/A
Wetlands	1
Managed Wetlands	5
Chemical Treatment/Direct Filtration	5
Overland Flow	N/A
Chemical Treatment/High Rate Settling	5
Chemical Treatment/Dissolved-Air Flotation\Filtration	5
Chemical Treatment/ Adsorption - Clarification/Filtration	5
Chemical Treatment/High-Rate Two-Stage Filtration	5
Chemical Treatment/High Rate Upflow Magnetic Direct Filtration	5
Iron-Coated Sand Filters	5
Electrocoagulation	5
Chemical Treatment/Microfiltration	1
Floating Plants	N/A
Submerged Vegetation Limerock	5
Dolimitic Limerock/Fixed Film Bioreactor	5
Periphyton STA's	10
Low-Intensity Chemical Dosing of STA's	5

Table D-8. Summary of Constructability Ratings

Alternative Technology	Constructability Rating
Chemical Treatment/In-Canal Sedimentation	1
Limerock Treatment	5
Sedimentation in Limestone Borrows	10
Percolation Ponds	5
Algal Filtration	10
Nutrient Management Systems	1
Sediment Dredging	N/A
Wetlands	1
Managed Wetlands	1
Chemical Treatment/Direct Filtration	1
Overland Flow	N/A
Chemical Treatment/High Rate Settling	1
Chemical Treatment/Dissolved-Air Flotation/Filtration	1
Chemical Treatment/ Adsorption - Clarification/Filtration	1
Chemical Treatment/High-Rate Two-Stage Filtration	1
Chemical Treatment/High Rate Upflow Magnetic Direct	1
Iron-Coated Sand Filters	1
Electrocoagulation	10
Chemical Treatment/Microfiltration	5
Floating Plants	N/A
Submerged Vegetation Limerock	5
Dolimitic Limerock/Fixed Film Bioreactor	10
Periphyton STA's	5
Low-Intensity Chemical Dosing of STA's	1

APPENDIX E

SUMMARY OF TECHNOLOGY RATINGS

Table E-1. Summary of Technology Ratings –150 - 50 ppb Group Ratings

Alternative Technology	Phosphorus Removal Capability	Capital Cost	O&M Cost	Flexibility	Scheduling	Public Health	Constructability
Chemical Treatment/In-Canal Sedimentation	7	1	4	3	5	3	1
Limerock Treatment	8	3	3	8	5	1	5
Sedimentation in Limestone Borrows	7	2	4	3	5	3	10
Percolation Ponds	4	10	4	8	5	1	5
Algal Filtration	5	4	4	8	5	1	10
Nutrient Management Systems	3	2	3	7	5	3	1
Sediment Dredging	10						
Wetlands	1	2	2	8	1	1	1
Managed Wetlands	1	3	3	5	5	3	1
Chemical Treatment/Direct Filtration	1	2	5	3	5	3	1
Overland Flow	10						
Chemical Treatment/High Rate Settling	1	3	4	3	5	3	1
Chemical Treatment/Dissolved Air Flotation/Filtration	1	2	6	2	5	3	1
Chemical Treatment/ Adsorption - Clarification/Filtration	1	2	5	3	5	3	1
Chemical Treatment/High-Rate Two-Stage Filtration	1	3	6	3	5	3	1
Chemcial Treatment/High Rate Upflow Magnetic Direct Filtration	4	2	5	3	5	3	1
Iron-Coated Sand Filters	5	2	3	6	5	3	1
Electrocoagulation	7	10	10	3	5	3	10
Chemical Treatment/Microfiltration	1	5	10	3	5	3	5
Floating Plants	10						-
Submerged Vegetation Limerock	3	1	2	7	5	1	5
Dolimitic Limerock/Fixed Film Bioreactor	8	5	3	8	5	1	10
Periphyton STA's							
Low-Intensity Chemical Dosing of STA's	1	2	2	6	5	2	1

Table E-2. Summary of Technology Ratings –150 - 30 ppb Group Ratings

Alternative Technology	Phosphorus Removal Capability	Capital Cost	O&M Cost	Flexibility	Scheduling	Public Health	Constructability
Chemical Treatment/In-Canal Sedimentation							
Limerock Treatment							
Sedimentation in Limestone Borrows							
Percolation Ponds							
Algal Filtration	6	5	5	8	5	1	10
Nutrient Management Systems							
Sediment Dredging							
Wetlands	3	3	2	8	1	1	1
Managed Wetlands	2	4	4	5	5	3	1
Chemical Treatment/Direct Filtration	1	3	6	3	5	3	1
Overland Flow							
Chemical Treatment/High Rate Settling	2	4	5	3	5	3	1
Chemical Treatment/Dissolved Air Flotation/Filtration	1	3	7	2	5	3	1
Chemical Treatment/ Adsorption - Clarification/Filtration	1	3	6	3	5	3	1
Chemical Treatment/High-Rate Two-Stage Filtration	1	4	7	3	5	3	1
Chemcial Treatment/High Rate Upflow Magnetic Direct Filtration	5	3	6	3	5	3	1
Iron-Coated Sand Filters	7	3	4	6	5	3	1
Electrocoagulation	8	10	10	3	5	3	10
Chemical Treatment/Microfiltration	1	8	10	3	1	3	5
Floating Plants							
Submerged Vegetation Limerock	5	1	2	7	5	1	5
Dolimitic Limerock/Fixed Film Bioreactor	9	8	4	8	5	1	10
Periphyton STA's							
Low-Intensity Chemical Dosing of STA's	2	3	3	6	5	2	1

Table E-3. Summary of Technology Ratings --150 - 10 ppb Group Ratings

Alternative Technology	Phosphorus Removal Capability	Capital Cost	O&M Cost	Flexibility	Scheduling	Public Health	Constructability
Chemical Treatment/In-Canal Sedimentation							
Limerock Treatment							
Sedimentation in Limestone Borrows							
Percolation Ponds							
Algal Filtration	8	6	6	8	5	1	10
Nutrient Management Systems							
Sediment Dredging							
Wetlands				8			
Managed Wetlands							
Chemical Treatment/Direct Filtration	3	3	7	3	5	3	1
Overland Flow							
Chemical Treatment/High Rate Settling							
Chemical Treatment/Dissolved Air Flotation/Filtration	2	3	8	2	5	3	1
Chemical Treatment/ Adsorption - Clarification/Filtration	2	4	7	3	5	3	1
Chemical Treatment/High-Rate Two-Stage Filtration	2	4	8	3	5	3	1
Chemcial Treatment/High Rate Upflow Magnetic Direct Filtration	7	3	7	3	5	3	1
Iron-Coated Sand Filters							
Electrocoagulation							
Chemical Treatment/Microfiltration	1	5	10	3	1	3	5
Floating Plants							
Submerged Vegetation Limerock	7	2	2	7	5	1	5
Dolimitic Limerock/Fixed Film Bioreactor							
Periphyton STA's							
Low-Intensity Chemical Dosing of STA's							

Table E-4. Summary of Technology Ratings 50 - 10 ppb Group Ratings

Alternative Technology	Phosphorus Removal Capability	Capital Cost	O&M Cost	Flexibility	Scheduling	Public Health	Constructability
Chemical Treatment/In-Canal Sedimentation							
Limerock Treatment							
Sedimentation in Limestone Borrows							
Percolation Ponds							
Algal Filtration	5	4	4	8	5	1	10
Nutrient Management Systems							
Sediment Dredging							
Wetlands							
Managed Wetlands							
Chemical Treatment/Direct Filtration	1	3	6	3	5	3	1
Overland Flow							
Chemical Treatment/High Rate Settling	2	3	5	3	5	3	1
Chemical Treatment/Dissolved Air Flotation/Filtration	3	3	8	2	5	3	1
Chemical Treatment/ Adsorption - Clarification/Filtration	1	4	6	3	5	3	1
Chemical Treatment/High-Rate Two-Stage Filtration	1	4	8	3	5	3	1
Chemcial Treatment/High Rate Upflow Magnetic Direct Filtration	6	3	7	3	5	3	1
Iron-Coated Sand Filters	6	3	4	6	5	3	1
Electrocoagulation	7	10	10	3	5	3	10
Chemical Treatment/Microfiltration	1	5	10	3	1	3	5
Floating Plants							
Submerged Vegetation Limerock	5	1	2	7	5	1	5
Dolimitic Limerock/Fixed Film Bioreactor							
Periphyton STA's	5	4	3	8	10	1	5
Low-Intensity Chemical Dosing of STA's							

APPENDIX F

PRESENT WORTH COST ANALYSIS BACK-UP

STORMWATER TREATMENT AREAS

Table 1. Summary of STA/FEB/Chemical Treatment Calculations

System Description	Value
STA or FEB?	STA
Type of chemical or polishing system	NONE
Overall treatment goal, mg/L P	0.05
EAA data	
Average flow, mgd	189
Influent P concentration, mg/L	0.150
Lake Okeechobee Data	
Average flow, mgd	0
Influent P concentration, mg/L	0.090
Rainfall and Evapotranspiration	
Average rainfall on STA or FEB, mgd	1
Average evapotranspiration from STA or FEB,mgd	2
STA/FEB Data	
Influent flow, mgd	189
Influent P concentration, mg/L	0.150
Settling rate, m/day	10.2
Area, acres	7410
Delta depth, ft	4.0
Volume, mgal	9658
Effluent P, mg/L	0.050
Wet period fraction	1.00
Chemical System Data	
Capacity, mgd	0
Average flow treated, mgd	0
Effluent P, mg/L	0.009
Percent of days in operation	0
Combined Effluent Data	
Effluent P, mg/L	0.0500
P inventory at end of period	
% in STA or FEB sediments	66.8
% in STA or FEB water column	0.5
% removed by chemical treatment	0.0
% in in system effluent	32.8
Sum of %	100.0

Table 1. Summary of STA/FEB/Chemical Treatment Calculations

System Description	Value
STA or FEB?	STA
Type of chemical or polishing system	None
Overall treatment goal, mg/L P	0.04
EAA data	
Average flow, mgd	189
Influent P concentration, mg/L	0.150
Lake Okeechobee Data	
Average flow, mgd	0
Influent P concentration, mg/L	0.090
Rainfall and Evapotranspiration	
Average rainfall on STA or FEB, mgd	1
Average evapotranspiration from STA or FEB,mgd	2
STA/FEB Data	
Influent flow, mgd	189
Influent P concentration, mg/L	0.150
Settling rate, m/day	10.2
Area, acres	8965
Delta depth, ft	4.0
Volume, mgal	11684
Effluent P, mg/L	0.040
Wet period fraction	1.00
Chemical System Data	
Capacity, mgd	0
Average flow treated, mgd	0
Effluent P, mg/L	0.009
Percent of days in operation	0
Combined Effluent Data	
Effluent P, mg/L	0.0400
P inventory at end of period	
% in STA or FEB sediments	73.4
% in STA or FEB water column	0.4
% removed by chemical treatment	0.0
% in in system effluent	26.1
Sum of %	100.0

Table 1. Summary of STA/FEB/Chemical Treatment Calculations

System Description	Value
STA or FEB?	STA
Type of chemical or polishing system	None
Overall treatment goal, mg/L P	0.03
EAA data	
Average flow, mgd	189
Influent P concentration, mg/L	0.150
Lake Okeechobee Data	
Average flow, mgd	0
Influent P concentration, mg/L	0.090
Rainfall and Evapotranspiration	
Average rainfall on STA or FEB, mgd	3
Average evapotranspiration from STA or FEB,mgd	4
STA/FEB Data	
Influent flow, mgd	189
Influent P concentration, mg/L	0.150
Settling rate, m/day	10.2
Area, acres	11020
Delta depth, ft	4.0
Volume, mgal	14363
Effluent P, mg/L	0.030
Wet period fraction	1.00
Chemical System Data	
Capacity, mgd	0
Average flow treated, mgd	0
Effluent P, mg/L	0.009
Percent of days in operation	0
Combined Effluent Data	
Effluent P, mg/L	0.0300
P inventory at end of period	
% in STA or FEB sediments	80.2
% in STA or FEB water column	0.4
% removed by chemical treatment	0.0
% in in system effluent	19.4
Sum of %	100.0

Table 1. Summary of STA/FEB/Chemical Treatment Calculations

System Description	Value
STA or FEB?	STA
Type of chemical or polishing system	None
Overall treatment goal, mg/L P	0.05
EAA data	
Average flow, mgd	189
Influent P concentration, mg/L	0.090
Lake Okeechobee Data	
Average flow, mgd	0
Influent P concentration, mg/L	0.090
Rainfall and Evapotranspiration	
Average rainfall on STA or FEB, mgd	1
Average evapotranspiration from STA or FEB,mgd	2
STA/FEB Data	
Influent flow, mgd	189
Influent P concentration, mg/L	0.090
Settling rate, m/day	10.2
Area, acres	4040
Delta depth, ft	4.0
Volume, mgal	5265
Effluent P, mg/L	0.050
Wet period fraction	1.00
Chemical System Data	
Capacity, mgd	0
Average flow treated, mgd	0
Effluent P, mg/L	0.009
Percent of days in operation	0
Combined Effluent Data	
Effluent P, mg/L	0.0500
P inventory at end of period	
% in STA or FEB sediments	44.7
% in STA or FEB water column	0.4
% removed by chemical treatment	0.0
% in in system effluent	54.9
Sum of %	100.0

Table 1. Summary of STA/FEB/Chemical Treatment Calculations

System Description	Value
STA or FEB?	STA
Type of chemical or polishing system	None
Overall treatment goal, mg/L P	0.04
EAA data	
Average flow, mgd	189
Influent P concentration, mg/L	0.090
Lake Okeechobee Data	
Average flow, mgd	0
Influent P concentration, mg/L	0.090
Rainfall and Evapotranspiration	
Average rainfall on STA or FEB, mgd	1
Average evapotranspiration from STA or FEB,mgd	2
STA/FEB Data	
Influent flow, mgd	189
Influent P concentration, mg/L	0.090
Settling rate, m/day	10.2
Area, acres	5620
Delta depth, ft	4.0
Volume, mgal	7325
Effluent P, mg/L	0.040
Wet period fraction	1.00
Chemical System Data	
Capacity, mgd	0
Average flow treated, mgd	0
Effluent P, mg/L	0.009
Percent of days in operation	0
Combined Effluent Data	
Effluent P, mg/L	0.0400
P inventory at end of period	
% in STA or FEB sediments	55.8
% in STA or FEB water column	0.5
% removed by chemical treatment	0.0
% in in system effluent	43.7
Sum of %	100.0

Table 1. Summary of STA/FEB/Chemical Treatment Calculations

System Description	Value
STA or FEB?	STA
Type of chemical or polishing system	None
Overall treatment goal, mg/L P	0.03
EAA data	
Average flow, mgd	189
Influent P concentration, mg/L	0.090
Lake Okeechobee Data	
Average flow, mgd	0
Influent P concentration, mg/L	0.090
Rainfall and Evapotranspiration	
Average rainfall on STA or FEB, mgd	3
Average evapotranspiration from STA or FEB,mgd	4
STA/FEB Data	
Influent flow, mgd	189
Influent P concentration, mg/L	0.090
Settling rate, m/day	10.2
Area, acres	7695
Delta depth, ft	4.0
Volume, mgal	10029
Effluent P, mg/L	0.030
Wet period fraction	1.00
Chemical System Data	
Capacity, mgd	0
Average flow treated, mgd	0
Effluent P, mg/L	0.009
Percent of days in operation	0
Combined Effluent Data	
Effluent P, mg/L	0.0300
P inventory at end of period	
% in STA or FEB sediments	67.0
% in STA or FEB water column	0.5
% removed by chemical treatment	0.0
% in in system effluent	32.5
Sum of %	100.0

MANAGED WETLANDS

Tabulation of calculations

Treatment train _____ C:\EVERGL\DATASH

Influent P, ppb	Particulate P in influent, %	Particulate P removed in FEB, %	Treatment goal. ppb P	Treatment plant effluent P, ppb	FEB, acres	Plant capacity, mgd	Average plant flow, mgd	Present worth, $ million	STA SIZE ACRES
	33	30							
	all the way	all the way							
150	30	33	50	31	1000	153	109	217.79	2800
					500	182	109	213.07	2800
					300	202	109	212.26	2800
					100	242	109	214.04	2800
			40	31	1000	153	109	235.12	4400
					500	182	109	230.40	4400
					300	202	109	229.59	4400
					100	242	109	231.37	4400
			30	31	1000	153	109	258.93	6600
					500	182	109	254.21	6600
					300	202	109	253.40	6600
					100	242	109	255.18	6600
90	30	33	50	20	500	80	66	162.49	1350
					300	88	66	160.12	1350
					100	105	65	158.80	1350
					50	115	66	164.55	1350
			40		500	80	66	180.39	2900
					300	88	66	178.02	2900
					100	105	65	176.31	2900
					50	115	66	177.24	2900
			30		500	80	66	203.13	5050
					300	88	66	200.77	5050
					100	105	65	199.05	5050
					50	115	66	199.98	5050

Table 1. Summary of STA/FEB/Chemical Treatment Calculations

System Description	Value	
STA or FEB?	MANAGED	WETLANDS
Type of chemical or polishing system		
Overall treatment goal, mg/L P	0.01	
EAA data		
Average flow, mgd	189	
Influent P concentration, mg/L	0.150	
Lake Okeechobee Data		
Average flow, mgd	1	
Influent P concentration, mg/L	0.090	
Rainfall and Evapotranspiration		
Average rainfall on STA or FEB, mgd	3	
Average evapotranspiration from STA or FEB,mgd	4	
STA/FEB Data		
Influent flow, mgd	190	
Influent P concentration, mg/L	0.150	
Settling rate, m/day	10.2	
Area, acres	1000	
Delta depth, ft	8.0	
Volume, mgal	2607	
Effluent P, mg/L	0.135	
Wet period fraction	1.00	
Chemical System Data		
Capacity, mgd	153	
Average flow treated, mgd	109	
Effluent P, mg/L	0.031	
Percent of days in operation	80	
Combined Effluent Data		
Effluent P, mg/L	0.0750	
P inventory at end of period		
% in STA or FEB sediments	10.6	
% in STA or FEB water column	0.0	
% removed by chemical treatment	39.7	
% in in system effluent	49.7	
Sum of %	100.0	

Table 1. Summary of STA/FEB/Chemical Treatment Calculations

System Description	Value
STA or FEB?	Managed Wetlands
Type of chemical or polishing system	
Overall treatment goal, mg/L P	0.01
EAA data	
Average flow, mgd	189
Influent P concentration, mg/L	0.150
Lake Okeechobee Data	
Average flow, mgd	0
Influent P concentration, mg/L	0.090
Rainfall and Evapotranspiration	
Average rainfall on STA or FEB, mgd	2
Average evapotranspiration from STA or FEB,mgd	2
STA/FEB Data	
Influent flow, mgd	190
Influent P concentration, mg/L	0.150
Settling rate, m/day	10.2
Area, acres	500
Delta depth, ft	8.0
Volume, mgal	1303
Effluent P, mg/L	0.135
Wet period fraction	1.00
Chemical System Data	
Capacity, mgd	182
Average flow treated, mgd	109
Effluent P, mg/L	0.031
Percent of days in operation	77
Combined Effluent Data	
Effluent P, mg/L	0.0750
P inventory at end of period	
% in STA or FEB sediments	10.2
% in STA or FEB water column	0.0
% removed by chemical treatment	39.9
% in in system effluent	49.8
Sum of %	100.0

Table 1. Summary of STA/FEB/Chemical Treatment Calculations

System Description	Value
STA or FEB?	Managed Wetlands
Type of chemical or polishing system	
Overall treatment goal, mg/L P	0.01
EAA data	
Average flow, mgd	189
Influent P concentration, mg/L	0.150
Lake Okeechobee Data	
Average flow, mgd	0
Influent P concentration, mg/L	0.090
Rainfall and Evapotranspiration	
Average rainfall on STA or FEB, mgd	1
Average evapotranspiration from STA or FEB,mgd	1
STA/FEB Data	
Influent flow, mgd	189
Influent P concentration, mg/L	0.150
Settling rate, m/day	10.2
Area, acres	300
Delta depth, ft	8.0
Volume, mgal	782
Effluent P, mg/L	0.135
Wet period fraction	1.00
Chemical System Data	
Capacity, mgd	202
Average flow treated, mgd	109
Effluent P, mg/L	0.031
Percent of days in operation	75
Combined Effluent Data	
Effluent P, mg/L	0.0750
P inventory at end of period	
% in STA or FEB sediments	10.1
% in STA or FEB water column	0.0
% removed by chemical treatment	40.0
% in in system effluent	49.9
Sum of %	100.0

Table 1. Summary of STA/FEB/Chemical Treatment Calculations

System Description	Value
STA or FEB?	Managed Wetlands
Type of chemical or polishing system	
Overall treatment goal, mg/L P	0.01
EAA data	
Average flow, mgd	189
Influent P concentration, mg/L	0.150
Lake Okeechobee Data	
Average flow, mgd	0
Influent P concentration, mg/L	0.090
Rainfall and Evapotranspiration	
Average rainfall on STA or FEB, mgd	0
Average evapotranspiration from STA or FEB,mgd	0
STA/FEB Data	
Influent flow, mgd	189
Influent P concentration, mg/L	0.150
Settling rate, m/day	10.2
Area, acres	100
Delta depth, ft	8.0
Volume, mgal	261
Effluent P, mg/L	0.135
Wet period fraction	1.00
Chemical System Data	
Capacity, mgd	242
Average flow treated, mgd	109
Effluent P, mg/L	0.031
Percent of days in operation	74
Combined Effluent Data	
Effluent P, mg/L	0.0750
P inventory at end of period	
% in STA or FEB sediments	10.0
% in STA or FEB water column	0.0
% removed by chemical treatment	40.0
% in in system effluent	50.0
Sum of %	100.0

Table 1. Summary of STA/FEB/Chemical Treatment Calculations

System Description	Value
STA or FEB?	Managed wetlands
Type of chemical or polishing system	
Overall treatment goal, mg/L P	0.01
EAA data	
Average flow, mgd	189
Influent P concentration, mg/L	0.090
Lake Okeechobee Data	
Average flow, mgd	0
Influent P concentration, mg/L	0.090
Rainfall and Evapotranspiration	
Average rainfall on STA or FEB, mgd	2
Average evapotranspiration from STA or FEB,mgd	2
STA/FEB Data	
Influent flow, mgd	189
Influent P concentration, mg/L	0.090
Settling rate, m/day	10.2
Area, acres	500
Delta depth, ft	8.0
Volume, mgal	1303
Effluent P, mg/L	0.081
Wet period fraction	1.00
Chemical System Data	
Capacity, mgd	80
Average flow treated, mgd	66
Effluent P, mg/L	0.02
Percent of days in operation	87
Combined Effluent Data	
Effluent P, mg/L	0.0599
P inventory at end of period	
% in STA or FEB sediments	10.4
% in STA or FEB water column	0.0
% removed by chemical treatment	23.4
% in in system effluent	66.2
Sum of %	100.0

Table 1. Summary of STA/FEB/Chemical Treatment Calculations

	Value
System Description	
STA or FEB?	Managed Wetlands
Type of chemical or polishing system	
Overall treatment goal, mg/L P	0.01
EAA data	
Average flow, mgd	189
Influent P concentration, mg/L	0.090
Lake Okeechobee Data	
Average flow, mgd	0
Influent P concentration, mg/L	0.090
Rainfall and Evapotranspiration	
Average rainfall on STA or FEB, mgd	1
Average evapotranspiration from STA or FEB,mgd	1
STA/FEB Data	
Influent flow, mgd	189
Influent P concentration, mg/L	0.090
Settling rate, m/day	10.2
Area, acres	300
Delta depth, ft	8.0
Volume, mgal	782
Effluent P, mg/L	0.081
Wet period fraction	1.00
Chemical System Data	
Capacity, mgd	88
Average flow treated, mgd	66
Effluent P, mg/L	0.02
Percent of days in operation	82
Combined Effluent Data	
Effluent P, mg/L	0.0599
P inventory at end of period	
% in STA or FEB sediments	10.2
% in STA or FEB water column	0.0
% removed by chemical treatment	23.5
% in in system effluent	66.4
Sum of %	100.0

Table 1. Summary of STA/FEB/Chemical Treatment Calculations

System Description	Value
STA or FEB?	Managed wetlands
Type of chemical or polishing system	
Overall treatment goal, mg/L P	0.01
EAA data	
Average flow, mgd	189
Influent P concentration, mg/L	0.090
Lake Okeechobee Data	
Average flow, mgd	0
Influent P concentration, mg/L	0.090
Rainfall and Evapotranspiration	
Average rainfall on STA or FEB, mgd	0
Average evapotranspiration from STA or FEB,mgd	0
STA/FEB Data	
Influent flow, mgd	189
Influent P concentration, mg/L	0.090
Settling rate, m/day	10.2
Area, acres	100
Delta depth, ft	8.0
Volume, mgal	261
Effluent P, mg/L	0.081
Wet period fraction	1.00
Chemical System Data	
Capacity, mgd	105
Average flow treated, mgd	65
Effluent P, mg/L	0.02
Percent of days in operation	76
Combined Effluent Data	
Effluent P, mg/L	0.0600
P inventory at end of period	
% in STA or FEB sediments	10.0
% in STA or FEB water column	0.0
% removed by chemical treatment	23.4
% in in system effluent	66.6
Sum of %	100.0

Table 1. Summary of STA/FEB/Chemical Treatment Calculations

System Description	Value
STA or FEB?	Managed Wetlands
Type of chemical or polishing system	
Overall treatment goal, mg/L P	0.01
EAA data	
Average flow, mgd	189
Influent P concentration, mg/L	0.090
Lake Okeechobee Data	
Average flow, mgd	0
Influent P concentration, mg/L	0.090
Rainfall and Evapotranspiration	
Average rainfall on STA or FEB, mgd	0
Average evapotranspiration from STA or FEB,mgd	0
STA/FEB Data	
Influent flow, mgd	189
Influent P concentration, mg/L	0.090
Settling rate, m/day	10.2
Area, acres	50
Delta depth, ft	8.0
Volume, mgal	130
Effluent P, mg/L	0.081
Wet period fraction	1.00
Chemical System Data	
Capacity, mgd	115
Average flow treated, mgd	66
Effluent P, mg/L	0.02
Percent of days in operation	75
Combined Effluent Data	
Effluent P, mg/L	0.0599
P inventory at end of period	
% in STA or FEB sediments	9.9
% in STA or FEB water column	0.0
% removed by chemical treatment	23.6
% in in system effluent	66.5
Sum of %	100.0

CHEMICAL TREATMENT/DIRECT FILTRATION

Tabulation of calculations

Treatment train Direct Filtration

C:\EVERGL\DATASH

Influent P, ppb	Particulate P in influent, %	Particulate P removed in FEB, %	Treatment goal, ppb P	Treatment plant effluent P, ppb	FEB, acres	Plant capacity, mgd	Average plant flow, mgd	Present worth, $ million
	33	30						
	all the way	all the way						
150	33	30	50	9.0	300	281	128	220.79
					500	251	128	220.05
					1000	209	128	222.73
					2000	169.5	127	233.62
					4000	142.5	125	262.53
150			40	9.0	300	370	143	241.86
					500	327	143	239.32
					1000	271	143	240.06
					2000	217	143	249.53
					4000	172.4	141	276.01
150			30	9.0	500	442	158	263.99
					1000	360	158	261.14
					2000	290	158	268.39
					4000	218	157	291.66
150			20	9.0	300	704	173	305.61
					500	640	173	300.16
					1000	522	173	292.32
					1500	448	173	290.55
					2000	407	173	293.34
150			10	9.0	500	1075	188	369.13
					1000	950	188	360.32
					2000	790	189	355.70
					2500	710	189	353.08
					4000	575	190	360.33

Table 1. Summary of STA/FEB/Chemical Treatment Calculations

System Description	Value
STA or FEB?	FEB
Type of chemical or polishing system	Direct Filtration
Overall treatment goal, mg/L P	0.05
EAA data	
Average flow, mgd	189
Influent P concentration, mg/L	0.150
Lake Okeechobee Data	
Average flow, mgd	0
Influent P concentration, mg/L	0.090
Rainfall and Evapotranspiration	
Average rainfall on STA or FEB, mgd	1
Average evapotranspiration from STA or FEB,mgd	1
STA/FEB Data	
Influent flow, mgd	189
Influent P concentration, mg/L	0.150
Settling rate, m/day	10.2
Area, acres	300
Delta depth, ft	8.0
Volume, mgal	782
Effluent P, mg/L	0.135
Wet period fraction	1.00
Chemical System Data	
Capacity, mgd	281
Average flow treated, mgd	128
Effluent P, mg/L	0.009
Percent of days in operation	74
Combined Effluent Data	
Effluent P, mg/L	0.0500
P inventory at end of period	
% in STA or FEB sediments	10.1
% in STA or FEB water column	0.0
% removed by chemical treatment	56.6
% in in system effluent	33.3
Sum of %	100.0

Table 1. Summary of STA/FEB/Chemical Treatment Calculations

System Description	Value
STA or FEB?	FEB
Type of chemical or polishing system	Direct Filtration
Overall treatment goal, mg/L P	0.05
EAA data	
Average flow, mgd	189
Influent P concentration, mg/L	0.150
Lake Okeechobee Data	
Average flow, mgd	1
Influent P concentration, mg/L	0.090
Rainfall and Evapotranspiration	
Average rainfall on STA or FEB, mgd	7
Average evapotranspiration from STA or FEB,mgd	8
STA/FEB Data	
Influent flow, mgd	190
Influent P concentration, mg/L	0.150
Settling rate, m/day	10.2
Area, acres	2000
Delta depth, ft	8.0
Volume, mgal	5213
Effluent P, mg/L	0.135
Wet period fraction	1.00
Chemical System Data	
Capacity, mgd	170
Average flow treated, mgd	127
Effluent P, mg/L	0.009
Percent of days in operation	83
Combined Effluent Data	
Effluent P, mg/L	0.0500
P inventory at end of period	
% in STA or FEB sediments	11.3
% in STA or FEB water column	0.2
% removed by chemical treatment	55.7
% in in system effluent	32.9
Sum of %	100.0

Table 1. Summary of STA/FEB/Chemical Treatment Calculations

System Description	Value
STA or FEB?	FEB
Type of chemical or polishing system	Direct Filtration
Overall treatment goal, mg/L P	0.05
EAA data	
Average flow, mgd	189
Influent P concentration, mg/L	0.150
Lake Okeechobee Data	
Average flow, mgd	1
Influent P concentration, mg/L	0.090
Rainfall and Evapotranspiration	
Average rainfall on STA or FEB, mgd	13
Average evapotranspiration from STA or FEB,mgd	16
STA/FEB Data	
Influent flow, mgd	190
Influent P concentration, mg/L	0.150
Settling rate, m/day	10.2
Area, acres	4000
Delta depth, ft	8.0
Volume, mgal	10427
Effluent P, mg/L	0.135
Wet period fraction	1.00
Chemical System Data	
Capacity, mgd	143
Average flow treated, mgd	125
Effluent P, mg/L	0.009
Percent of days in operation	91
Combined Effluent Data	
Effluent P, mg/L	0.0500
P inventory at end of period	
% in STA or FEB sediments	12.6
% in STA or FEB water column	0.9
% removed by chemical treatment	54.4
% in in system effluent	32.1
Sum of %	100.0

Table 1. Summary of STA/FEB/Chemical Treatment Calculations

System Description	Value
STA or FEB?	FEB
Type of chemical or polishing system	Direct Filtration
Overall treatment goal, mg/L P	0.05
EAA data	
Average flow, mgd	189
Influent P concentration, mg/L	0.150
Lake Okeechobee Data	
Average flow, mgd	1
Influent P concentration, mg/L	0.090
Rainfall and Evapotranspiration	
Average rainfall on STA or FEB, mgd	3
Average evapotranspiration from STA or FEB,mgd	4
STA/FEB Data	
Influent flow, mgd	190
Influent P concentration, mg/L	0.150
Settling rate, m/day	10.2
Area, acres	1000
Delta depth, ft	8.0
Volume, mgal	2607
Effluent P, mg/L	0.135
Wet period fraction	1.00
Chemical System Data	
Capacity, mgd	209
Average flow treated, mgd	128
Effluent P, mg/L	0.009
Percent of days in operation	76
Combined Effluent Data	
Effluent P, mg/L	0.0500
P inventory at end of period	
% in STA or FEB sediments	10.6
% in STA or FEB water column	0.0
% removed by chemical treatment	56.3
% in in system effluent	33.1
Sum of %	100.0

Table 1. Summary of STA/FEB/Chemical Treatment Calculations

System Description	Value
STA or FEB?	FEB
Type of chemical or polishing system	Direct Filtration
Overall treatment goal, mg/L P	0.05
EAA data	
Average flow, mgd	189
Influent P concentration, mg/L	0.150
Lake Okeechobee Data	
Average flow, mgd	0
Influent P concentration, mg/L	0.090
Rainfall and Evapotranspiration	
Average rainfall on STA or FEB, mgd	2
Average evapotranspiration from STA or FEB,mgd	2
STA/FEB Data	
Influent flow, mgd	190
Influent P concentration, mg/L	0.150
Settling rate, m/day	10.2
Area, acres	500
Delta depth, ft	8.0
Volume, mgal	1303
Effluent P, mg/L	0.135
Wet period fraction	1.00
Chemical System Data	
Capacity, mgd	251
Average flow treated, mgd	128
Effluent P, mg/L	0.009
Percent of days in operation	75
Combined Effluent Data	
Effluent P, mg/L	0.0500
P inventory at end of period	
% in STA or FEB sediments	10.2
% in STA or FEB water column	0.0
% removed by chemical treatment	56.5
% in in system effluent	33.2
Sum of %	100.0

Table 1. Summary of STA/FEB/Chemical Treatment Calculations

System Description	Value
STA or FEB?	FEB
Type of chemical or polishing system	Direct Filtration
Overall treatment goal, mg/L P	0.04
EAA data	
Average flow, mgd	189
Influent P concentration, mg/L	0.150
Lake Okeechobee Data	
Average flow, mgd	1
Influent P concentration, mg/L	0.090
Rainfall and Evapotranspiration	
Average rainfall on STA or FEB, mgd	2
Average evapotranspiration from STA or FEB,mgd	2
STA/FEB Data	
Influent flow, mgd	190
Influent P concentration, mg/L	0.150
Settling rate, m/day	10.2
Area, acres	500
Delta depth, ft	8.0
Volume, mgal	1303
Effluent P, mg/L	0.135
Wet period fraction	1.00
Chemical System Data	
Capacity, mgd	327
Average flow treated, mgd	143
Effluent P, mg/L	0.009
Percent of days in operation	74
Combined Effluent Data	
Effluent P, mg/L	0.0400
P inventory at end of period	
% in STA or FEB sediments	10.2
% in STA or FEB water column	0.0
% removed by chemical treatment	63.2
% in in system effluent	26.6
Sum of %	100.0

Table 1. Summary of STA/FEB/Chemical Treatment Calculations

System Description	Value
STA or FEB?	FEB
Type of chemical or polishing system	Direct Filtration
Overall treatment goal, mg/L P	0.04
EAA data	
Average flow, mgd	189
Influent P concentration, mg/L	0.150
Lake Okeechobee Data	
Average flow, mgd	1
Influent P concentration, mg/L	0.090
Rainfall and Evapotranspiration	
Average rainfall on STA or FEB, mgd	3
Average evapotranspiration from STA or FEB,mgd	4
STA/FEB Data	
Influent flow, mgd	190
Influent P concentration, mg/L	0.150
Settling rate, m/day	10.2
Area, acres	1000
Delta depth, ft	8.0
Volume, mgal	2607
Effluent P, mg/L	0.135
Wet period fraction	1.00
Chemical System Data	
Capacity, mgd	271
Average flow treated, mgd	143
Effluent P, mg/L	0.009
Percent of days in operation	74
Combined Effluent Data	
Effluent P, mg/L	0.0400
P inventory at end of period	
% in STA or FEB sediments	10.6
% in STA or FEB water column	0.0
% removed by chemical treatment	62.9
% in in system effluent	26.5
Sum of %	100.0

Table 1. Summary of STA/FEB/Chemical Treatment Calculations

System Description	Value
STA or FEB?	FEB
Type of chemical or polishing system	Direct Filtration
Overall treatment goal, mg/L P	0.04
EAA data	
Average flow, mgd	189
Influent P concentration, mg/L	0.150
Lake Okeechobee Data	
Average flow, mgd	2
Influent P concentration, mg/L	0.090
Rainfall and Evapotranspiration	
Average rainfall on STA or FEB, mgd	7
Average evapotranspiration from STA or FEB,mgd	8
STA/FEB Data	
Influent flow, mgd	191
Influent P concentration, mg/L	0.149
Settling rate, m/day	10.2
Area, acres	2000
Delta depth, ft	8.0
Volume, mgal	5213
Effluent P, mg/L	0.135
Wet period fraction	1.00
Chemical System Data	
Capacity, mgd	217
Average flow treated, mgd	143
Effluent P, mg/L	0.009
Percent of days in operation	78
Combined Effluent Data	
Effluent P, mg/L	0.0400
P inventory at end of period	
% in STA or FEB sediments	11.3
% in STA or FEB water column	0.0
% removed by chemical treatment	62.4
% in in system effluent	26.3
Sum of %	100.0

Table 1. Summary of STA/FEB/Chemical Treatment Calculations

System Description	Value
STA or FEB?	FEB
Type of chemical or polishing system	Direct Filtration
Overall treatment goal, mg/L P	0.04
EAA data	
Average flow, mgd	189
Influent P concentration, mg/L	0.150
Lake Okeechobee Data	
Average flow, mgd	0
Influent P concentration, mg/L	0.090
Rainfall and Evapotranspiration	
Average rainfall on STA or FEB, mgd	1
Average evapotranspiration from STA or FEB,mgd	1
STA/FEB Data	
Influent flow, mgd	189
Influent P concentration, mg/L	0.150
Settling rate, m/day	10.2
Area, acres	300
Delta depth, ft	8.0
Volume, mgal	782
Effluent P, mg/L	0.135
Wet period fraction	1.00
Chemical System Data	
Capacity, mgd	370
Average flow treated, mgd	143
Effluent P, mg/L	0.009
Percent of days in operation	73
Combined Effluent Data	
Effluent P, mg/L	0.0400
P inventory at end of period	
% in STA or FEB sediments	10.1
% in STA or FEB water column	0.0
% removed by chemical treatment	63.3
% in in system effluent	26.6
Sum of %	100.0

Table 1. Summary of STA/FEB/Chemical Treatment Calculations

System Description	Value
STA or FEB?	FEB
Type of chemical or polishing system	Direct Filtration
Overall treatment goal, mg/L P	0.04
EAA data	
Average flow, mgd	189
Influent P concentration, mg/L	0.150
Lake Okeechobee Data	
Average flow, mgd	2
Influent P concentration, mg/L	0.090
Rainfall and Evapotranspiration	
Average rainfall on STA or FEB, mgd	13
Average evapotranspiration from STA or FEB,mgd	16
STA/FEB Data	
Influent flow, mgd	191
Influent P concentration, mg/L	0.149
Settling rate, m/day	10.2
Area, acres	4000
Delta depth, ft	8.0
Volume, mgal	10427
Effluent P, mg/L	0.135
Wet period fraction	1.00
Chemical System Data	
Capacity, mgd	172
Average flow treated, mgd	141
Effluent P, mg/L	0.009
Percent of days in operation	86
Combined Effluent Data	
Effluent P, mg/L	0.0400
P inventory at end of period	
% in STA or FEB sediments	12.6
% in STA or FEB water column	0.8
% removed by chemical treatment	60.9
% in in system effluent	25.7
Sum of %	100.0

Table 1. Summary of STA/FEB/Chemical Treatment Calculations

System Description	Value
STA or FEB?	FEB
Type of chemical or polishing system	Direct Filtration
Overall treatment goal, mg/L P	0.03
EAA data	
Average flow, mgd	189
Influent P concentration, mg/L	0.150
Lake Okeechobee Data	
Average flow, mgd	1
Influent P concentration, mg/L	0.090
Rainfall and Evapotranspiration	
Average rainfall on STA or FEB, mgd	2
Average evapotranspiration from STA or FEB,mgd	2
STA/FEB Data	
Influent flow, mgd	190
Influent P concentration, mg/L	0.150
Settling rate, m/day	10.2
Area, acres	500
Delta depth, ft	8.0
Volume, mgal	1303
Effluent P, mg/L	0.135
Wet period fraction	1.00
Chemical System Data	
Capacity, mgd	442
Average flow treated, mgd	158
Effluent P, mg/L	0.009
Percent of days in operation	73
Combined Effluent Data	
Effluent P, mg/L	0.0300
P inventory at end of period	
% in STA or FEB sediments	10.2
% in STA or FEB water column	0.0
% removed by chemical treatment	69.8
% in in system effluent	19.9
Sum of %	100.0

Table 1. Summary of STA/FEB/Chemical Treatment Calculations

System Description	Value
STA or FEB?	FEB
Type of chemical or polishing system	Direct Filtration
Overall treatment goal, mg/L P	0.03
EAA data	
Average flow, mgd	189
Influent P concentration, mg/L	0.150
Lake Okeechobee Data	
Average flow, mgd	1
Influent P concentration, mg/L	0.090
Rainfall and Evapotranspiration	
Average rainfall on STA or FEB, mgd	3
Average evapotranspiration from STA or FEB,mgd	4
STA/FEB Data	
Influent flow, mgd	190
Influent P concentration, mg/L	0.150
Settling rate, m/day	10.2
Area, acres	1000
Delta depth, ft	8.0
Volume, mgal	2607
Effluent P, mg/L	0.135
Wet period fraction	1.00
Chemical System Data	
Capacity, mgd	360
Average flow treated, mgd	158
Effluent P, mg/L	0.009
Percent of days in operation	72
Combined Effluent Data	
Effluent P, mg/L	0.0300
P inventory at end of period	
% in STA or FEB sediments	10.6
% in STA or FEB water column	0.0
% removed by chemical treatment	69.5
% in in system effluent	19.9
Sum of %	100.0

Table 1. Summary of STA/FEB/Chemical Treatment Calculations

System Description	Value
STA or FEB?	FEB
Type of chemical or polishing system	Direct Filtration
Overall treatment goal, mg/L P	0.03
EAA data	
Average flow, mgd	189
Influent P concentration, mg/L	0.150
Lake Okeechobee Data	
Average flow, mgd	2
Influent P concentration, mg/L	0.090
Rainfall and Evapotranspiration	
Average rainfall on STA or FEB, mgd	7
Average evapotranspiration from STA or FEB,mgd	8
STA/FEB Data	
Influent flow, mgd	191
Influent P concentration, mg/L	0.149
Settling rate, m/day	10.2
Area, acres	2000
Delta depth, ft	8.0
Volume, mgal	5213
Effluent P, mg/L	0.135
Wet period fraction	1.00
Chemical System Data	
Capacity, mgd	290
Average flow treated, mgd	158
Effluent P, mg/L	0.009
Percent of days in operation	74
Combined Effluent Data	
Effluent P, mg/L	0.0300
P inventory at end of period	
% in STA or FEB sediments	11.3
% in STA or FEB water column	0.0
% removed by chemical treatment	69.0
% in in system effluent	19.8
Sum of %	100.0

Table 1. Summary of STA/FEB/Chemical Treatment Calculations

System Description	Value
STA or FEB?	FEB
Type of chemical or polishing system	Direct Filtration
Overall treatment goal, mg/L P	0.03
EAA data	
Average flow, mgd	189
Influent P concentration, mg/L	0.150
Lake Okeechobee Data	
Average flow, mgd	3
Influent P concentration, mg/L	0.090
Rainfall and Evapotranspiration	
Average rainfall on STA or FEB, mgd	13
Average evapotranspiration from STA or FEB,mgd	16
STA/FEB Data	
Influent flow, mgd	192
Influent P concentration, mg/L	0.149
Settling rate, m/day	10.2
Area, acres	4000
Delta depth, ft	8.0
Volume, mgal	10427
Effluent P, mg/L	0.134
Wet period fraction	1.00
Chemical System Data	
Capacity, mgd	218
Average flow treated, mgd	157
Effluent P, mg/L	0.009
Percent of days in operation	80
Combined Effluent Data	
Effluent P, mg/L	0.0300
P inventory at end of period	
% in STA or FEB sediments	12.6
% in STA or FEB water column	0.6
% removed by chemical treatment	67.4
% in in system effluent	19.4
Sum of %	100.0

Table 1. Summary of STA/FEB/Chemical Treatment Calculations

	Value
System Description	
STA or FEB?	FEB
Type of chemical or polishing system	Direct Filtration
Overall treatment goal, mg/L P	0.02
EAA data	
Average flow, mgd	189
Influent P concentration, mg/L	0.150
Lake Okeechobee Data	
Average flow, mgd	1
Influent P concentration, mg/L	0.090
Rainfall and Evapotranspiration	
Average rainfall on STA or FEB, mgd	3
Average evapotranspiration from STA or FEB,mgd	4
STA/FEB Data	
Influent flow, mgd	190
Influent P concentration, mg/L	0.150
Settling rate, m/day	10.2
Area, acres	1000
Delta depth, ft	8.0
Volume, mgal	2607
Effluent P, mg/L	0.135
Wet period fraction	1.00
Chemical System Data	
Capacity, mgd	522
Average flow treated, mgd	173
Effluent P, mg/L	0.009
Percent of days in operation	70
Combined Effluent Data	
Effluent P, mg/L	0.0200
P inventory at end of period	
% in STA or FEB sediments	10.6
% in STA or FEB water column	0.0
% removed by chemical treatment	76.2
% in in system effluent	13.3
Sum of %	100.0

Table 1. Summary of STA/FEB/Chemical Treatment Calculations

	Value
System Description	
STA or FEB?	FEB
Type of chemical or polishing system	Direct Filtration
Overall treatment goal, mg/L P	0.02
EAA data	
Average flow, mgd	189
Influent P concentration, mg/L	0.150
Lake Okeechobee Data	
Average flow, mgd	2
Influent P concentration, mg/L	0.090
Rainfall and Evapotranspiration	
Average rainfall on STA or FEB, mgd	7
Average evapotranspiration from STA or FEB,mgd	8
STA/FEB Data	
Influent flow, mgd	191
Influent P concentration, mg/L	0.149
Settling rate, m/day	10.2
Area, acres	2000
Delta depth, ft	8.0
Volume, mgal	5213
Effluent P, mg/L	0.135
Wet period fraction	1.00
Chemical System Data	
Capacity, mgd	407
Average flow treated, mgd	173
Effluent P, mg/L	0.009
Percent of days in operation	71
Combined Effluent Data	
Effluent P, mg/L	0.0200
P inventory at end of period	
% in STA or FEB sediments	11.3
% in STA or FEB water column	0.0
% removed by chemical treatment	75.6
% in in system effluent	13.2
Sum of %	100.0

Table 1. Summary of STA/FEB/Chemical Treatment Calculations

System Description	Value
STA or FEB?	FEB
Type of chemical or polishing system	Direct Filtration
Overall treatment goal, mg/L P	0.02
EAA data	
Average flow, mgd	189
Influent P concentration, mg/L	0.150
Lake Okeechobee Data	
Average flow, mgd	1
Influent P concentration, mg/L	0.090
Rainfall and Evapotranspiration	
Average rainfall on STA or FEB, mgd	2
Average evapotranspiration from STA or FEB,mgd	2
STA/FEB Data	
Influent flow, mgd	190
Influent P concentration, mg/L	0.150
Settling rate, m/day	10.2
Area, acres	500
Delta depth, ft	8.0
Volume, mgal	1303
Effluent P, mg/L	0.135
Wet period fraction	1.00
Chemical System Data	
Capacity, mgd	640
Average flow treated, mgd	173
Effluent P, mg/L	0.009
Percent of days in operation	72
Combined Effluent Data	
Effluent P, mg/L	0.0200
P inventory at end of period	
% in STA or FEB sediments	10.2
% in STA or FEB water column	0.0
% removed by chemical treatment	76.5
% in in system effluent	13.3
Sum of %	100.0

Table 1. Summary of STA/FEB/Chemical Treatment Calculations

System Description	Value
STA or FEB?	FEB
Type of chemical or polishing system	Direct Filtration
Overall treatment goal, mg/L P	0.02
EAA data	
Average flow, mgd	189
Influent P concentration, mg/L	0.150
Lake Okeechobee Data	
Average flow, mgd	0
Influent P concentration, mg/L	0.090
Rainfall and Evapotranspiration	
Average rainfall on STA or FEB, mgd	1
Average evapotranspiration from STA or FEB,mgd	1
STA/FEB Data	
Influent flow, mgd	189
Influent P concentration, mg/L	0.150
Settling rate, m/day	10.2
Area, acres	300
Delta depth, ft	8.0
Volume, mgal	782
Effluent P, mg/L	0.135
Wet period fraction	1.00
Chemical System Data	
Capacity, mgd	704
Average flow treated, mgd	173
Effluent P, mg/L	0.009
Percent of days in operation	73
Combined Effluent Data	
Effluent P, mg/L	0.0200
P inventory at end of period	
% in STA or FEB sediments	10.1
% in STA or FEB water column	0.0
% removed by chemical treatment	76.6
% in in system effluent	13.3
Sum of %	100.0

Table 1. Summary of STA/FEB/Chemical Treatment Calculations

System Description	Value
STA or FEB?	FEB
Type of chemical or polishing system	Direct Filtration
Overall treatment goal, mg/L P	0.02
EAA data	
Average flow, mgd	189
Influent P concentration, mg/L	0.150
Lake Okeechobee Data	
Average flow, mgd	2
Influent P concentration, mg/L	0.090
Rainfall and Evapotranspiration	
Average rainfall on STA or FEB, mgd	5
Average evapotranspiration from STA or FEB,mgd	6
STA/FEB Data	
Influent flow, mgd	191
Influent P concentration, mg/L	0.149
Settling rate, m/day	10.2
Area, acres	1500
Delta depth, ft	8.0
Volume, mgal	3910
Effluent P, mg/L	0.135
Wet period fraction	1.00
Chemical System Data	
Capacity, mgd	448
Average flow treated, mgd	173
Effluent P, mg/L	0.009
Percent of days in operation	71
Combined Effluent Data	
Effluent P, mg/L	0.0200
P inventory at end of period	
% in STA or FEB sediments	10.9
% in STA or FEB water column	0.0
% removed by chemical treatment	75.8
% in in system effluent	13.2
Sum of %	100.0

Table 1. Summary of STA/FEB/Chemical Treatment Calculations

System Description	Value
STA or FEB?	FEB
Type of chemical or polishing system	Direct Filtration
Overall treatment goal, mg/L P	0.01
EAA data	
Average flow, mgd	189
Influent P concentration, mg/L	0.150
Lake Okeechobee Data	
Average flow, mgd	1
Influent P concentration, mg/L	0.090
Rainfall and Evapotranspiration	
Average rainfall on STA or FEB, mgd	2
Average evapotranspiration from STA or FEB,mgd	2
STA/FEB Data	
Influent flow, mgd	190
Influent P concentration, mg/L	0.150
Settling rate, m/day	10.2
Area, acres	500
Delta depth, ft	8.0
Volume, mgal	1303
Effluent P, mg/L	0.135
Wet period fraction	1.00
Chemical System Data	
Capacity, mgd	1075
Average flow treated, mgd	188
Effluent P, mg/L	0.009
Percent of days in operation	72
Combined Effluent Data	
Effluent P, mg/L	0.0100
P inventory at end of period	
% in STA or FEB sediments	10.2
% in STA or FEB water column	0.0
% removed by chemical treatment	83.1
% in in system effluent	6.6
Sum of %	100.0

Table 1. Summary of STA/FEB/Chemical Treatment Calculations

System Description	Value
STA or FEB?	FEB
Type of chemical or polishing system	Direct Filtration
Overall treatment goal, mg/L P	0.01
EAA data	
Average flow, mgd	189
Influent P concentration, mg/L	0.150
Lake Okeechobee Data	
Average flow, mgd	1
Influent P concentration, mg/L	0.090
Rainfall and Evapotranspiration	
Average rainfall on STA or FEB, mgd	3
Average evapotranspiration from STA or FEB,mgd	4
STA/FEB Data	
Influent flow, mgd	190
Influent P concentration, mg/L	0.150
Settling rate, m/day	10.2
Area, acres	1000
Delta depth, ft	8.0
Volume, mgal	2607
Effluent P, mg/L	0.135
Wet period fraction	1.00
Chemical System Data	
Capacity, mgd	950
Average flow treated, mgd	188
Effluent P, mg/L	0.009
Percent of days in operation	70
Combined Effluent Data	
Effluent P, mg/L	0.0100
P inventory at end of period	
% in STA or FEB sediments	10.6
% in STA or FEB water column	0.0
% removed by chemical treatment	82.8
% in in system effluent	6.7
Sum of %	100.0

Table 1. Summary of STA/FEB/Chemical Treatment Calculations

System Description	Value
STA or FEB?	FEB
Type of chemical or polishing system	Direct Filtration
Overall treatment goal, mg/L P	0.01
EAA data	
Average flow, mgd	189
Influent P concentration, mg/L	0.150
Lake Okeechobee Data	
Average flow, mgd	2
Influent P concentration, mg/L	0.090
Rainfall and Evapotranspiration	
Average rainfall on STA or FEB, mgd	7
Average evapotranspiration from STA or FEB,mgd	8
STA/FEB Data	
Influent flow, mgd	191
Influent P concentration, mg/L	0.149
Settling rate, m/day	10.2
Area, acres	2000
Delta depth, ft	8.0
Volume, mgal	5213
Effluent P, mg/L	0.135
Wet period fraction	1.00
Chemical System Data	
Capacity, mgd	790
Average flow treated, mgd	189
Effluent P, mg/L	0.009
Percent of days in operation	69
Combined Effluent Data	
Effluent P, mg/L	0.0100
P inventory at end of period	
% in STA or FEB sediments	11.3
% in STA or FEB water column	0.0
% removed by chemical treatment	82.2
% in in system effluent	6.6
Sum of %	100.0

Table 1. Summary of STA/FEB/Chemical Treatment Calculations

System Description	Value
STA or FEB?	FEB
Type of chemical or polishing system	Direct Filtration
Overall treatment goal, mg/L P	0.01
EAA data	
Average flow, mgd	189
Influent P concentration, mg/L	0.150
Lake Okeechobee Data	
Average flow, mgd	5
Influent P concentration, mg/L	0.090
Rainfall and Evapotranspiration	
Average rainfall on STA or FEB, mgd	13
Average evapotranspiration from STA or FEB,mgd	16
STA/FEB Data	
Influent flow, mgd	194
Influent P concentration, mg/L	0.149
Settling rate, m/day	10.2
Area, acres	4000
Delta depth, ft	8.0
Volume, mgal	10427
Effluent P, mg/L	0.134
Wet period fraction	1.00
Chemical System Data	
Capacity, mgd	575
Average flow treated, mgd	190
Effluent P, mg/L	0.009
Percent of days in operation	66
Combined Effluent Data	
Effluent P, mg/L	0.0100
P inventory at end of period	
% in STA or FEB sediments	12.6
% in STA or FEB water column	0.0
% removed by chemical treatment	80.9
% in in system effluent	6.5
Sum of %	100.0

Tabulation of calculations

Treatment train Direct Filtration C:\EVERGL\DATASH

Influent P, ppb	Particulate P in influent, %	Particulate P removed in FEB, %	Treatment goal, ppb P	Treatment plant effluent P, ppb	FEB, acres	Plant capacity, mgd	Average plant flow, mgd	Present worth, $ million
	33	30						
	all the way	all the way						
90			50	9.0	100	141	79	169.39
					200	127	79	169.17
					250	122.5	79	169.40
					300	118	79	169.64
90			40	9.0	100	224	105	196.05
					200	202	105	194.72
					300	187	105	194.36
					350	181	105	194.38
90			30	9.0	200	318	130	225.37
					400	278	131	223.83
					500	263	130	222.88
					600	251	130	222.92
					700	242	131	223.95
90			20	9.0	400	449	156	262.09
					600	405	156	259.41
					800	370	156	257.96
					1000	348	156	258.31
90			10	9.0	500	830	182	331.71
					1000	700	182	322.21
					1500	615	182	318.92
					2000	560	182	319.77

Table 1. Summary of STA/FEB/Chemical Treatment Calculations

System Description	Value
STA or FEB?	FEB
Type of chemical or polishing system	Direct Filtration
Overall treatment goal, mg/L P	0.05
EAA data	
Average flow, mgd	189
Influent P concentration, mg/L	0.090
Lake Okeechobee Data	
Average flow, mgd	0
Influent P concentration, mg/L	0.090
Rainfall and Evapotranspiration	
Average rainfall on STA or FEB, mgd	0
Average evapotranspiration from STA or FEB,mgd	0
STA/FEB Data	
Influent flow, mgd	189
Influent P concentration, mg/L	0.090
Settling rate, m/day	10.2
Area, acres	100
Delta depth, ft	8.0
Volume, mgal	261
Effluent P, mg/L	0.081
Wet period fraction	1.00
Chemical System Data	
Capacity, mgd	141
Average flow treated, mgd	79
Effluent P, mg/L	0.007
Percent of days in operation	75
Combined Effluent Data	
Effluent P, mg/L	0.0500
P inventory at end of period	
% in STA or FEB sediments	10.0
% in STA or FEB water column	0.0
% removed by chemical treatment	34.6
% in in system effluent	55.5
Sum of %	100.0

Table 1. Summary of STA/FEB/Chemical Treatment Calculations

System Description	Value
STA or FEB?	FEB
Type of chemical or polishing system	Direct Filtration
Overall treatment goal, mg/L P	0.05
EAA data	
Average flow, mgd	189
Influent P concentration, mg/L	0.090
Lake Okeechobee Data	
Average flow, mgd	0
Influent P concentration, mg/L	0.090
Rainfall and Evapotranspiration	
Average rainfall on STA or FEB, mgd	1
Average evapotranspiration from STA or FEB,mgd	1
STA/FEB Data	
Influent flow, mgd	189
Influent P concentration, mg/L	0.090
Settling rate, m/day	10.2
Area, acres	200
Delta depth, ft	8.0
Volume, mgal	521
Effluent P, mg/L	0.081
Wet period fraction	1.00
Chemical System Data	
Capacity, mgd	127
Average flow treated, mgd	79
Effluent P, mg/L	0.007
Percent of days in operation	77
Combined Effluent Data	
Effluent P, mg/L	0.0500
P inventory at end of period	
% in STA or FEB sediments	10.1
% in STA or FEB water column	0.0
% removed by chemical treatment	34.4
% in in system effluent	55.5
Sum of %	100.0

Table 1. Summary of STA/FEB/Chemical Treatment Calculations

System Description	Value
STA or FEB?	FEB
Type of chemical or polishing system	Direct Filtration
Overall treatment goal, mg/L P	0.05
EAA data	
Average flow, mgd	189
Influent P concentration, mg/L	0.090
Lake Okeechobee Data	
Average flow, mgd	0
Influent P concentration, mg/L	0.090
Rainfall and Evapotranspiration	
Average rainfall on STA or FEB, mgd	1
Average evapotranspiration from STA or FEB,mgd	1
STA/FEB Data	
Influent flow, mgd	189
Influent P concentration, mg/L	0.090
Settling rate, m/day	10.2
Area, acres	250
Delta depth, ft	8.0
Volume, mgal	652
Effluent P, mg/L	0.081
Wet period fraction	1.00
Chemical System Data	
Capacity, mgd	123
Average flow treated, mgd	79
Effluent P, mg/L	0.007
Percent of days in operation	78
Combined Effluent Data	
Effluent P, mg/L	0.0500
P inventory at end of period	
% in STA or FEB sediments	10.1
% in STA or FEB water column	0.0
% removed by chemical treatment	34.5
% in in system effluent	55.4
Sum of %	100.0

Table 1. Summary of STA/FEB/Chemical Treatment Calculations

System Description	Value
STA or FEB?	FEB
Type of chemical or polishing system	Direct Filtration
Overall treatment goal, mg/L P	0.05
EAA data	
Average flow, mgd	189
Influent P concentration, mg/L	0.090
Lake Okeechobee Data	
Average flow, mgd	0
Influent P concentration, mg/L	0.090
Rainfall and Evapotranspiration	
Average rainfall on STA or FEB, mgd	1
Average evapotranspiration from STA or FEB,mgd	1
STA/FEB Data	
Influent flow, mgd	189
Influent P concentration, mg/L	0.090
Settling rate, m/day	10.2
Area, acres	300
Delta depth, ft	8.0
Volume, mgal	782
Effluent P, mg/L	0.081
Wet period fraction	1.00
Chemical System Data	
Capacity, mgd	118
Average flow treated, mgd	79
Effluent P, mg/L	0.007
Percent of days in operation	79
Combined Effluent Data	
Effluent P, mg/L	0.0500
P inventory at end of period	
% in STA or FEB sediments	10.2
% in STA or FEB water column	0.0
% removed by chemical treatment	34.5
% in in system effluent	55.4
Sum of %	100.0

Table 1. Summary of STA/FEB/Chemical Treatment Calculations

System Description	Value
STA or FEB?	FEB
Type of chemical or polishing system	Direct Filtration
Overall treatment goal, mg/L P	0.04
EAA data	
Average flow, mgd	189
Influent P concentration, mg/L	0.090
Lake Okeechobee Data	
Average flow, mgd	0
Influent P concentration, mg/L	0.090
Rainfall and Evapotranspiration	
Average rainfall on STA or FEB, mgd	0
Average evapotranspiration from STA or FEB,mgd	0
STA/FEB Data	
Influent flow, mgd	189
Influent P concentration, mg/L	0.090
Settling rate, m/day	10.2
Area, acres	100
Delta depth, ft	8.0
Volume, mgal	261
Effluent P, mg/L	0.081
Wet period fraction	1.00
Chemical System Data	
Capacity, mgd	224
Average flow treated, mgd	105
Effluent P, mg/L	0.007
Percent of days in operation	74
Combined Effluent Data	
Effluent P, mg/L	0.0400
P inventory at end of period	
% in STA or FEB sediments	10.0
% in STA or FEB water column	0.0
% removed by chemical treatment	45.6
% in in system effluent	44.4
Sum of %	100.0

Table 1. Summary of STA/FEB/Chemical Treatment Calculations

System Description	Value
STA or FEB?	FEB
Type of chemical or polishing system	Direct Filtration
Overall treatment goal, mg/L P	0.04
EAA data	
Average flow, mgd	189
Influent P concentration, mg/L	0.090
Lake Okeechobee Data	
Average flow, mgd	0
Influent P concentration, mg/L	0.090
Rainfall and Evapotranspiration	
Average rainfall on STA or FEB, mgd	1
Average evapotranspiration from STA or FEB,mgd	1
STA/FEB Data	
Influent flow, mgd	189
Influent P concentration, mg/L	0.090
Settling rate, m/day	10.2
Area, acres	200
Delta depth, ft	8.0
Volume, mgal	521
Effluent P, mg/L	0.081
Wet period fraction	1.00
Chemical System Data	
Capacity, mgd	202
Average flow treated, mgd	105
Effluent P, mg/L	0.007
Percent of days in operation	75
Combined Effluent Data	
Effluent P, mg/L	0.0400
P inventory at end of period	
% in STA or FEB sediments	10.1
% in STA or FEB water column	0.0
% removed by chemical treatment	45.6
% in in system effluent	44.3
Sum of %	100.0

Table 1. Summary of STA/FEB/Chemical Treatment Calculations

System Description	Value
STA or FEB?	FEB
Type of chemical or polishing system	Direct Filtration
Overall treatment goal, mg/L P	0.04
EAA data	
Average flow, mgd	189
Influent P concentration, mg/L	0.090
Lake Okeechobee Data	
Average flow, mgd	0
Influent P concentration, mg/L	0.090
Rainfall and Evapotranspiration	
Average rainfall on STA or FEB, mgd	1
Average evapotranspiration from STA or FEB,mgd	1
STA/FEB Data	
Influent flow, mgd	189
Influent P concentration, mg/L	0.090
Settling rate, m/day	10.2
Area, acres	300
Delta depth, ft	8.0
Volume, mgal	782
Effluent P, mg/L	0.081
Wet period fraction	1.00
Chemical System Data	
Capacity, mgd	187
Average flow treated, mgd	105
Effluent P, mg/L	0.007
Percent of days in operation	76
Combined Effluent Data	
Effluent P, mg/L	0.0400
P inventory at end of period	
% in STA or FEB sediments	10.2
% in STA or FEB water column	0.0
% removed by chemical treatment	45.5
% in in system effluent	44.3
Sum of %	100.0

Table 1. Summary of STA/FEB/Chemical Treatment Calculations

System Description	Value
STA or FEB?	FEB
Type of chemical or polishing system	Direct Filtration
Overall treatment goal, mg/L P	0.04
EAA data	
Average flow, mgd	189
Influent P concentration, mg/L	0.090
Lake Okeechobee Data	
Average flow, mgd	0
Influent P concentration, mg/L	0.090
Rainfall and Evapotranspiration	
Average rainfall on STA or FEB, mgd	1
Average evapotranspiration from STA or FEB,mgd	1
STA/FEB Data	
Influent flow, mgd	189
Influent P concentration, mg/L	0.090
Settling rate, m/day	10.2
Area, acres	350
Delta depth, ft	8.0
Volume, mgal	912
Effluent P, mg/L	0.081
Wet period fraction	1.00
Chemical System Data	
Capacity, mgd	181
Average flow treated, mgd	105
Effluent P, mg/L	0.007
Percent of days in operation	76
Combined Effluent Data	
Effluent P, mg/L	0.0400
P inventory at end of period	
% in STA or FEB sediments	10.2
% in STA or FEB water column	0.0
% removed by chemical treatment	45.4
% in in system effluent	44.3
Sum of %	100.0

Table 1. Summary of STA/FEB/Chemical Treatment Calculations

System Description	Value
STA or FEB?	FEB
Type of chemical or polishing system	Direct Filtration
Overall treatment goal, mg/L P	0.03
EAA data	
Average flow, mgd	189
Influent P concentration, mg/L	0.090
Lake Okeechobee Data	
Average flow, mgd	0
Influent P concentration, mg/L	0.090
Rainfall and Evapotranspiration	
Average rainfall on STA or FEB, mgd	1
Average evapotranspiration from STA or FEB,mgd	1
STA/FEB Data	
Influent flow, mgd	189
Influent P concentration, mg/L	0.090
Settling rate, m/day	10.2
Area, acres	200
Delta depth, ft	8.0
Volume, mgal	521
Effluent P, mg/L	0.081
Wet period fraction	1.00
Chemical System Data	
Capacity, mgd	318
Average flow treated, mgd	130
Effluent P, mg/L	0.007
Percent of days in operation	74
Combined Effluent Data	
Effluent P, mg/L	0.0300
P inventory at end of period	
% in STA or FEB sediments	10.1
% in STA or FEB water column	0.0
% removed by chemical treatment	56.6
% in in system effluent	33.3
Sum of %	100.0

Table 1. Summary of STA/FEB/Chemical Treatment Calculations

System Description	Value
STA or FEB?	FEB
Type of chemical or polishing system	Direct Filtration
Overall treatment goal, mg/L P	0.03
EAA data	
Average flow, mgd	189
Influent P concentration, mg/L	0.090
Lake Okeechobee Data	
Average flow, mgd	0
Influent P concentration, mg/L	0.090
Rainfall and Evapotranspiration	
Average rainfall on STA or FEB, mgd	1
Average evapotranspiration from STA or FEB,mgd	2
STA/FEB Data	
Influent flow, mgd	190
Influent P concentration, mg/L	0.090
Settling rate, m/day	10.2
Area, acres	400
Delta depth, ft	8.0
Volume, mgal	1043
Effluent P, mg/L	0.081
Wet period fraction	1.00
Chemical System Data	
Capacity, mgd	278
Average flow treated, mgd	131
Effluent P, mg/L	0.007
Percent of days in operation	74
Combined Effluent Data	
Effluent P, mg/L	0.0300
P inventory at end of period	
% in STA or FEB sediments	10.3
% in STA or FEB water column	0.0
% removed by chemical treatment	56.5
% in in system effluent	33.2
Sum of %	100.0

Table 1. Summary of STA/FEB/Chemical Treatment Calculations

System Description	Value
STA or FEB?	FEB
Type of chemical or polishing system	Direct Filtration
Overall treatment goal, mg/L P	0.03
EAA data	
Average flow, mgd	189
Influent P concentration, mg/L	0.090
Lake Okeechobee Data	
Average flow, mgd	0
Influent P concentration, mg/L	0.090
Rainfall and Evapotranspiration	
Average rainfall on STA or FEB, mgd	2
Average evapotranspiration from STA or FEB,mgd	2
STA/FEB Data	
Influent flow, mgd	190
Influent P concentration, mg/L	0.090
Settling rate, m/day	10.2
Area, acres	500
Delta depth, ft	8.0
Volume, mgal	1303
Effluent P, mg/L	0.081
Wet period fraction	1.00
Chemical System Data	
Capacity, mgd	263
Average flow treated, mgd	130
Effluent P, mg/L	0.007
Percent of days in operation	75
Combined Effluent Data	
Effluent P, mg/L	0.0300
P inventory at end of period	
% in STA or FEB sediments	10.4
% in STA or FEB water column	0.0
% removed by chemical treatment	56.4
% in in system effluent	33.2
Sum of %	100.0

Table 1. Summary of STA/FEB/Chemical Treatment Calculations

System Description	Value
STA or FEB?	FEB
Type of chemical or polishing system	Direct Filtration
Overall treatment goal, mg/L P	0.03
EAA data	
Average flow, mgd	189
Influent P concentration, mg/L	0.090
Lake Okeechobee Data	
Average flow, mgd	1
Influent P concentration, mg/L	0.090
Rainfall and Evapotranspiration	
Average rainfall on STA or FEB, mgd	2
Average evapotranspiration from STA or FEB,mgd	2
STA/FEB Data	
Influent flow, mgd	190
Influent P concentration, mg/L	0.090
Settling rate, m/day	10.2
Area, acres	600
Delta depth, ft	8.0
Volume, mgal	1564
Effluent P, mg/L	0.081
Wet period fraction	1.00
Chemical System Data	
Capacity, mgd	251
Average flow treated, mgd	130
Effluent P, mg/L	0.007
Percent of days in operation	75
Combined Effluent Data	
Effluent P, mg/L	0.0300
P inventory at end of period	
% in STA or FEB sediments	10.5
% in STA or FEB water column	0.0
% removed by chemical treatment	56.4
% in in system effluent	33.2
Sum of %	100.0

Table 1. Summary of STA/FEB/Chemical Treatment Calculations

System Description	Value
STA or FEB?	FEB
Type of chemical or polishing system	Direct Filtration
Overall treatment goal, mg/L P	0.03
EAA data	
Average flow, mgd	189
Influent P concentration, mg/L	0.090
Lake Okeechobee Data	
Average flow, mgd	1
Influent P concentration, mg/L	0.090
Rainfall and Evapotranspiration	
Average rainfall on STA or FEB, mgd	2
Average evapotranspiration from STA or FEB,mgd	3
STA/FEB Data	
Influent flow, mgd	190
Influent P concentration, mg/L	0.090
Settling rate, m/day	10.2
Area, acres	700
Delta depth, ft	8.0
Volume, mgal	1825
Effluent P, mg/L	0.081
Wet period fraction	1.00
Chemical System Data	
Capacity, mgd	242
Average flow treated, mgd	131
Effluent P, mg/L	0.007
Percent of days in operation	75
Combined Effluent Data	
Effluent P, mg/L	0.0300
P inventory at end of period	
% in STA or FEB sediments	10.6
% in STA or FEB water column	0.0
% removed by chemical treatment	56.3
% in in system effluent	33.1
Sum of %	100.0

Table 1. Summary of STA/FEB/Chemical Treatment Calculations

System Description	Value
STA or FEB?	FEB
Type of chemical or polishing system	Direct Filtration
Overall treatment goal, mg/L P	0.02
EAA data	
Average flow, mgd	189
Influent P concentration, mg/L	0.090
Lake Okeechobee Data	
Average flow, mgd	0
Influent P concentration, mg/L	0.090
Rainfall and Evapotranspiration	
Average rainfall on STA or FEB, mgd	1
Average evapotranspiration from STA or FEB,mgd	2
STA/FEB Data	
Influent flow, mgd	190
Influent P concentration, mg/L	0.090
Settling rate, m/day	10.2
Area, acres	400
Delta depth, ft	8.0
Volume, mgal	1043
Effluent P, mg/L	0.081
Wet period fraction	1.00
Chemical System Data	
Capacity, mgd	449
Average flow treated, mgd	156
Effluent P, mg/L	0.007
Percent of days in operation	73
Combined Effluent Data	
Effluent P, mg/L	0.0200
P inventory at end of period	
% in STA or FEB sediments	10.3
% in STA or FEB water column	0.0
% removed by chemical treatment	67.6
% in in system effluent	22.2
Sum of %	100.0

Table 1. Summary of STA/FEB/Chemical Treatment Calculations

System Description	Value
STA or FEB?	FEB
Type of chemical or polishing system	Direct Filtration
Overall treatment goal, mg/L P	0.02
EAA data	
Average flow, mgd	189
Influent P concentration, mg/L	0.090
Lake Okeechobee Data	
Average flow, mgd	1
Influent P concentration, mg/L	0.090
Rainfall and Evapotranspiration	
Average rainfall on STA or FEB, mgd	2
Average evapotranspiration from STA or FEB,mgd	2
STA/FEB Data	
Influent flow, mgd	190
Influent P concentration, mg/L	0.090
Settling rate, m/day	10.2
Area, acres	600
Delta depth, ft	8.0
Volume, mgal	1564
Effluent P, mg/L	0.081
Wet period fraction	1.00
Chemical System Data	
Capacity, mgd	405
Average flow treated, mgd	156
Effluent P, mg/L	0.007
Percent of days in operation	73
Combined Effluent Data	
Effluent P, mg/L	0.0200
P inventory at end of period	
% in STA or FEB sediments	10.5
% in STA or FEB water column	0.0
% removed by chemical treatment	67.4
% in in system effluent	22.1
Sum of %	100.0

Table 1. Summary of STA/FEB/Chemical Treatment Calculations

System Description	Value
STA or FEB?	FEB
Type of chemical or polishing system	Direct Filtration
Overall treatment goal, mg/L P	0.02
EAA data	
Average flow, mgd	189
Influent P concentration, mg/L	0.090
Lake Okeechobee Data	
Average flow, mgd	1
Influent P concentration, mg/L	0.090
Rainfall and Evapotranspiration	
Average rainfall on STA or FEB, mgd	3
Average evapotranspiration from STA or FEB,mgd	3
STA/FEB Data	
Influent flow, mgd	190
Influent P concentration, mg/L	0.090
Settling rate, m/day	10.2
Area, acres	800
Delta depth, ft	8.0
Volume, mgal	2085
Effluent P, mg/L	0.081
Wet period fraction	1.00
Chemical System Data	
Capacity, mgd	370
Average flow treated, mgd	156
Effluent P, mg/L	0.007
Percent of days in operation	73
Combined Effluent Data	
Effluent P, mg/L	0.0200
P inventory at end of period	
% in STA or FEB sediments	10.7
% in STA or FEB water column	0.0
% removed by chemical treatment	67.3
% in in system effluent	22.1
Sum of %	100.0

Table 1. Summary of STA/FEB/Chemical Treatment Calculations

System Description	Value
STA or FEB?	FEB
Type of chemical or polishing system	Direct Filtration
Overall treatment goal, mg/L P	0.01
EAA data	
Average flow, mgd	189
Influent P concentration, mg/L	0.090
Lake Okeechobee Data	
Average flow, mgd	1
Influent P concentration, mg/L	0.090
Rainfall and Evapotranspiration	
Average rainfall on STA or FEB, mgd	2
Average evapotranspiration from STA or FEB,mgd	2
STA/FEB Data	
Influent flow, mgd	190
Influent P concentration, mg/L	0.090
Settling rate, m/day	10.2
Area, acres	500
Delta depth, ft	8.0
Volume, mgal	1303
Effluent P, mg/L	0.081
Wet period fraction	1.00
Chemical System Data	
Capacity, mgd	830
Average flow treated, mgd	182
Effluent P, mg/L	0.007
Percent of days in operation	72
Combined Effluent Data	
Effluent P, mg/L	0.0100
P inventory at end of period	
% in STA or FEB sediments	10.4
% in STA or FEB water column	0.0
% removed by chemical treatment	78.6
% in in system effluent	11.0
Sum of %	100.0

Table 1. Summary of STA/FEB/Chemical Treatment Calculations

System Description	Value
STA or FEB?	FEB
Type of chemical or polishing system	Direct Filtration
Overall treatment goal, mg/L P	0.01
EAA data	
Average flow, mgd	189
Influent P concentration, mg/L	0.090
Lake Okeechobee Data	
Average flow, mgd	1
Influent P concentration, mg/L	0.090
Rainfall and Evapotranspiration	
Average rainfall on STA or FEB, mgd	3
Average evapotranspiration from STA or FEB,mgd	4
STA/FEB Data	
Influent flow, mgd	190
Influent P concentration, mg/L	0.090
Settling rate, m/day	10.2
Area, acres	1000
Delta depth, ft	8.0
Volume, mgal	2607
Effluent P, mg/L	0.081
Wet period fraction	1.00
Chemical System Data	
Capacity, mgd	700
Average flow treated, mgd	182
Effluent P, mg/L	0.007
Percent of days in operation	70
Combined Effluent Data	
Effluent P, mg/L	0.0100
P inventory at end of period	
% in STA or FEB sediments	10.8
% in STA or FEB water column	0.0
% removed by chemical treatment	78.2
% in in system effluent	10.9
Sum of %	100.0

Table 1. Summary of STA/FEB/Chemical Treatment Calculations

System Description	Value
STA or FEB?	FEB
Type of chemical or polishing system	Direct Filtration
Overall treatment goal, mg/L P	0.01
EAA data	
Average flow, mgd	189
Influent P concentration, mg/L	0.090
Lake Okeechobee Data	
Average flow, mgd	2
Influent P concentration, mg/L	0.090
Rainfall and Evapotranspiration	
Average rainfall on STA or FEB, mgd	5
Average evapotranspiration from STA or FEB,mgd	6
STA/FEB Data	
Influent flow, mgd	191
Influent P concentration, mg/L	0.090
Settling rate, m/day	10.2
Area, acres	1500
Delta depth, ft	8.0
Volume, mgal	3910
Effluent P, mg/L	0.081
Wet period fraction	1.00
Chemical System Data	
Capacity, mgd	615
Average flow treated, mgd	182
Effluent P, mg/L	0.007
Percent of days in operation	70
Combined Effluent Data	
Effluent P, mg/L	0.0100
P inventory at end of period	
% in STA or FEB sediments	11.3
% in STA or FEB water column	0.0
% removed by chemical treatment	77.8
% in in system effluent	10.9
Sum of %	100.0

Table 1. Summary of STA/FEB/Chemical Treatment Calculations

System Description	Value
STA or FEB?	FEB
Type of chemical or polishing system	Direct Filtration
Overall treatment goal, mg/L P	0.01
EAA data	
Average flow, mgd	189
Influent P concentration, mg/L	0.090
Lake Okeechobee Data	
Average flow, mgd	2
Influent P concentration, mg/L	0.090
Rainfall and Evapotranspiration	
Average rainfall on STA or FEB, mgd	7
Average evapotranspiration from STA or FEB,mgd	8
STA/FEB Data	
Influent flow, mgd	191
Influent P concentration, mg/L	0.090
Settling rate, m/day	10.2
Area, acres	2000
Delta depth, ft	8.0
Volume, mgal	5213
Effluent P, mg/L	0.081
Wet period fraction	1.00
Chemical System Data	
Capacity, mgd	560
Average flow treated, mgd	182
Effluent P, mg/L	0.007
Percent of days in operation	70
Combined Effluent Data	
Effluent P, mg/L	0.0100
P inventory at end of period	
% in STA or FEB sediments	11.8
% in STA or FEB water column	0.0
% removed by chemical treatment	77.4
% in in system effluent	10.9
Sum of %	100.0

STA - CHEMICAL TREATMENT/ DIRECT FILTRATION

Table 1. Summary of STA/FEB/Chemical Treatment Calculations

	Value
System Description	
STA or FEB?	STA
Type of chemical or polishing system	
Overall treatment goal, mg/L P	0.05
EAA data	
Average flow, mgd	189
Influent P concentration, mg/L	0.150
Lake Okeechobee Data	
Average flow, mgd	0
Influent P concentration, mg/L	0.090
Rainfall and Evapotranspiration	
Average rainfall on STA or FEB, mgd	25
Average evapotranspiration from STA or FEB,mgd	29
STA/FEB Data	
Influent flow, mgd	189
Influent P concentration, mg/L	0.150
Settling rate, m/day	10.2
Area, acres	7410
Delta depth, ft	4.0
Volume, mgal	9658
Effluent P, mg/L	0.050
Wet period fraction	1.00
Chemical System Data	
Capacity, mgd	0
Average flow treated, mgd	0
Effluent P, mg/L	0.006
Percent of days in operation	0
Combined Effluent Data	
Effluent P, mg/L	0.0500
P inventory at end of period	
% in STA or FEB sediments	68.5
% in STA or FEB water column	0.4
% removed by chemical treatment	0.0
% in in system effluent	31.1
Sum of %	100.0

Table 1. Summary of STA/FEB/Chemical Treatment Calculations

System Description	Value
STA or FEB?	STA
Type of chemical or polishing system	
Overall treatment goal, mg/L P	0.04
EAA data	
Average flow, mgd	189
Influent P concentration, mg/L	0.150
Lake Okeechobee Data	
Average flow, mgd	0
Influent P concentration, mg/L	0.090
Rainfall and Evapotranspiration	
Average rainfall on STA or FEB, mgd	25
Average evapotranspiration from STA or FEB,mgd	29
STA/FEB Data	
Influent flow, mgd	189
Influent P concentration, mg/L	0.150
Settling rate, m/day	10.2
Area, acres	7410
Delta depth, ft	4.0
Volume, mgal	9658
Effluent P, mg/L	0.050
Wet period fraction	1.00
Chemical System Data	
Capacity, mgd	42
Average flow treated, mgd	42
Effluent P, mg/L	0.006
Percent of days in operation	100
Combined Effluent Data	
Effluent P, mg/L	0.0399
P inventory at end of period	
% in STA or FEB sediments	68.5
% in STA or FEB water column	0.4
% removed by chemical treatment	6.3
% in in system effluent	24.8
Sum of %	100.0

Table 1. Summary of STA/FEB/Chemical Treatment Calculations

System Description	Value
STA or FEB?	STA
Type of chemical or polishing system	
Overall treatment goal, mg/L P	0.03
EAA data	
Average flow, mgd	189
Influent P concentration, mg/L	0.150
Lake Okeechobee Data	
Average flow, mgd	1
Influent P concentration, mg/L	0.090
Rainfall and Evapotranspiration	
Average rainfall on STA or FEB, mgd	25
Average evapotranspiration from STA or FEB,mgd	29
STA/FEB Data	
Influent flow, mgd	191
Influent P concentration, mg/L	0.150
Settling rate, m/day	10.2
Area, acres	7410
Delta depth, ft	4.0
Volume, mgal	9658
Effluent P, mg/L	0.050
Wet period fraction	1.00
Chemical System Data	
Capacity, mgd	89
Average flow treated, mgd	83
Effluent P, mg/L	0.006
Percent of days in operation	94
Combined Effluent Data	
Effluent P, mg/L	0.0302
P inventory at end of period	
% in STA or FEB sediments	68.2
% in STA or FEB water column	0.3
% removed by chemical treatment	12.5
% in in system effluent	18.9
Sum of %	100.0

Table 1. Summary of STA/FEB/Chemical Treatment Calculations

System Description	Value
STA or FEB?	STA
Type of chemical or polishing system	
Overall treatment goal, mg/L P	0.02
EAA data	
Average flow, mgd	189
Influent P concentration, mg/L	0.150
Lake Okeechobee Data	
Average flow, mgd	4
Influent P concentration, mg/L	0.090
Rainfall and Evapotranspiration	
Average rainfall on STA or FEB, mgd	25
Average evapotranspiration from STA or FEB,mgd	29
STA/FEB Data	
Influent flow, mgd	193
Influent P concentration, mg/L	0.149
Settling rate, m/day	10.2
Area, acres	7410
Delta depth, ft	4.0
Volume, mgal	9658
Effluent P, mg/L	0.051
Wet period fraction	1.00
Chemical System Data	
Capacity, mgd	155
Average flow treated, mgd	128
Effluent P, mg/L	0.006
Percent of days in operation	85
Combined Effluent Data	
Effluent P, mg/L	0.0200
P inventory at end of period	
% in STA or FEB sediments	67.8
% in STA or FEB water column	0.3
% removed by chemical treatment	19.3
% in in system effluent	12.6
Sum of %	100.0

Table 1. Summary of STA/FEB/Chemical Treatment Calculations

System Description	Value
STA or FEB?	STA
Type of chemical or polishing system	
Overall treatment goal, mg/L P	0.01
EAA data	
Average flow, mgd	189
Influent P concentration, mg/L	0.150
Lake Okeechobee Data	
Average flow, mgd	9
Influent P concentration, mg/L	0.090
Rainfall and Evapotranspiration	
Average rainfall on STA or FEB, mgd	25
Average evapotranspiration from STA or FEB,mgd	29
STA/FEB Data	
Influent flow, mgd	198
Influent P concentration, mg/L	0.147
Settling rate, m/day	10.2
Area, acres	7410
Delta depth, ft	4.0
Volume, mgal	9658
Effluent P, mg/L	0.052
Wet period fraction	1.00
Chemical System Data	
Capacity, mgd	360
Average flow treated, mgd	176
Effluent P, mg/L	0.006
Percent of days in operation	66
Combined Effluent Data	
Effluent P, mg/L	0.0100
P inventory at end of period	
% in STA or FEB sediments	66.9
% in STA or FEB water column	0.0
% removed by chemical treatment	26.7
% in in system effluent	6.4
Sum of %	100.0

Table 1. Summary of STA/FEB/Chemical Treatment Calculations

System Description	Value
STA or FEB?	STA
Type of chemical or polishing system	
Overall treatment goal, mg/L P	0.05
EAA data	
Average flow, mgd	189
Influent P concentration, mg/L	0.090
Lake Okeechobee Data	
Average flow, mgd	0
Influent P concentration, mg/L	0.090
Rainfall and Evapotranspiration	
Average rainfall on STA or FEB, mgd	13
Average evapotranspiration from STA or FEB,mgd	16
STA/FEB Data	
Influent flow, mgd	189
Influent P concentration, mg/L	0.090
Settling rate, m/day	10.2
Area, acres	4040
Delta depth, ft	4.0
Volume, mgal	5265
Effluent P, mg/L	0.050
Wet period fraction	1.00
Chemical System Data	
Capacity, mgd	0
Average flow treated, mgd	0
Effluent P, mg/L	0.006
Percent of days in operation	0
Combined Effluent Data	
Effluent P, mg/L	0.0500
P inventory at end of period	
% in STA or FEB sediments	46.7
% in STA or FEB water column	0.4
% removed by chemical treatment	0.0
% in in system effluent	52.9
Sum of %	100.0

Table 1. Summary of STA/FEB/Chemical Treatment Calculations

System Description	Value
STA or FEB?	STA
Type of chemical or polishing system	
Overall treatment goal, mg/L P	0.04
EAA data	
Average flow, mgd	189
Influent P concentration, mg/L	0.090
Lake Okeechobee Data	
Average flow, mgd	0
Influent P concentration, mg/L	0.090
Rainfall and Evapotranspiration	
Average rainfall on STA or FEB, mgd	13
Average evapotranspiration from STA or FEB,mgd	16
STA/FEB Data	
Influent flow, mgd	189
Influent P concentration, mg/L	0.090
Settling rate, m/day	10.2
Area, acres	4040
Delta depth, ft	4.0
Volume, mgal	5265
Effluent P, mg/L	0.050
Wet period fraction	1.00
Chemical System Data	
Capacity, mgd	43
Average flow treated, mgd	42
Effluent P, mg/L	0.006
Percent of days in operation	98
Combined Effluent Data	
Effluent P, mg/L	0.0401
P inventory at end of period	
% in STA or FEB sediments	46.7
% in STA or FEB water column	0.3
% removed by chemical treatment	10.6
% in in system effluent	42.4
Sum of %	100.0

Table 1. Summary of STA/FEB/Chemical Treatment Calculations

System Description	Value
STA or FEB?	STA
Type of chemical or polishing system	
Overall treatment goal, mg/L P	0.03
EAA data	
Average flow, mgd	189
Influent P concentration, mg/L	0.090
Lake Okeechobee Data	
Average flow, mgd	1
Influent P concentration, mg/L	0.090
Rainfall and Evapotranspiration	
Average rainfall on STA or FEB, mgd	13
Average evapotranspiration from STA or FEB,mgd	16
STA/FEB Data	
Influent flow, mgd	190
Influent P concentration, mg/L	0.090
Settling rate, m/day	10.2
Area, acres	4040
Delta depth, ft	4.0
Volume, mgal	5265
Effluent P, mg/L	0.050
Wet period fraction	1.00
Chemical System Data	
Capacity, mgd	95
Average flow treated, mgd	86
Effluent P, mg/L	0.006
Percent of days in operation	92
Combined Effluent Data	
Effluent P, mg/L	0.0300
P inventory at end of period	
% in STA or FEB sediments	46.5
% in STA or FEB water column	0.2
% removed by chemical treatment	21.5
% in in system effluent	31.8
Sum of %	100.0

Table 1. Summary of STA/FEB/Chemical Treatment Calculations

System Description	Value
STA or FEB?	STA
Type of chemical or polishing system	
Overall treatment goal, mg/L P	0.02
EAA data	
Average flow, mgd	189
Influent P concentration, mg/L	0.090
Lake Okeechobee Data	
Average flow, mgd	3
Influent P concentration, mg/L	0.090
Rainfall and Evapotranspiration	
Average rainfall on STA or FEB, mgd	13
Average evapotranspiration from STA or FEB,mgd	16
STA/FEB Data	
Influent flow, mgd	192
Influent P concentration, mg/L	0.090
Settling rate, m/day	10.2
Area, acres	4040
Delta depth, ft	4.0
Volume, mgal	5265
Effluent P, mg/L	0.050
Wet period fraction	1.00
Chemical System Data	
Capacity, mgd	181
Average flow treated, mgd	130
Effluent P, mg/L	0.006
Percent of days in operation	79
Combined Effluent Data	
Effluent P, mg/L	0.0200
P inventory at end of period	
% in STA or FEB sediments	46.2
% in STA or FEB water column	0.1
% removed by chemical treatment	32.4
% in in system effluent	21.3
Sum of %	100.0

Table 1. Summary of STA/FEB/Chemical Treatment Calculations

System Description	Value
STA or FEB?	STA
Type of chemical or polishing system	
Overall treatment goal, mg/L P	0.01
EAA data	
Average flow, mgd	189
Influent P concentration, mg/L	0.090
Lake Okeechobee Data	
Average flow, mgd	5
Influent P concentration, mg/L	0.090
Rainfall and Evapotranspiration	
Average rainfall on STA or FEB, mgd	13
Average evapotranspiration from STA or FEB,mgd	16
STA/FEB Data	
Influent flow, mgd	194
Influent P concentration, mg/L	0.090
Settling rate, m/day	10.2
Area, acres	4040
Delta depth, ft	4.0
Volume, mgal	5265
Effluent P, mg/L	0.051
Wet period fraction	1.00
Chemical System Data	
Capacity, mgd	420
Average flow treated, mgd	174
Effluent P, mg/L	0.006
Percent of days in operation	67
Combined Effluent Data	
Effluent P, mg/L	0.0100
P inventory at end of period	
% in STA or FEB sediments	45.9
% in STA or FEB water column	0.0
% removed by chemical treatment	43.4
% in in system effluent	10.6
Sum of %	100.0

CHEMICAL TREATMENT/HIGH RATE SETTLING

Tabulation of calculations

Treatment train FE. . H2 Tate Sedimentation C:\EVERGL\DATASH

Influent P, ppb	Particulate P in influent, %	Particulate P removed in FEB, %	Treatment goal, ppb P	Treatment plant effluent P, ppb	FEB, acres	Plant capacity, mgd	Average plant flow, mgd	Present worth, $ million
	33	30						
	all the way	all the way						
[illegible]			[illegible]	25	500	[illegible]	14[illegible]	281.16
					1000	290	147	273.7[illegible]
					2000	231	146	274.31
			40		[illegible]	504	164	[illegible]
					1000	407	164	315.09
					2000	320	164	311.15
					5000	231	164	314.7[illegible]
			30		500	805	181	[illegible]
					1000	674	181	376.95
					2000	530	182	377.82
					5000	453	182	371.41
					4000	416	18[illegible]	[illegible]
90			[illegible]	16	[illegible]	131	91	191.26
					[illegible]	112	91	194.61
					[illegible]	172	90	194.99
			40		1000	184	120	229.67
					500	219	120	230.44
					[illegible]	243	120	234.31
					100	270	119	243.68
			30		500	[illegible]	149	[illegible]
					[illegible]	305	149	278.3[illegible]
					[illegible]	341	149	278.6[illegible]
			20		500	735	178	404.5
					1000	605	177	376.5[illegible]
					[illegible]	[illegible]	178	356.91
			40		15[illegible]	162	119	[illegible]
			20		500	525	175	
			20		2[illegible]	475	179	[illegible]
					500	415	174	

Table 1. Summary of STA/FEB/Chemical Treatment Calculations

System Description	Value
STA or FEB?	FEB
Type of chemical or polishing system	HRS
Overall treatment goal, mg/L P	0.05
EAA data	
Average flow, mgd	189
Influent P concentration, mg/L	0.150
Lake Okeechobee Data	
Average flow, mgd	1
Influent P concentration, mg/L	0.090
Rainfall and Evapotranspiration	
Average rainfall on STA or FEB, mgd	2
Average evapotranspiration from STA or FEB,mgd	2
STA/FEB Data	
Influent flow, mgd	190
Influent P concentration, mg/L	0.150
Settling rate, m/day	10.2
Area, acres	500
Delta depth, ft	8.0
Volume, mgal	1303
Effluent P, mg/L	0.135
Wet period fraction	1.00
Chemical System Data	
Capacity, mgd	350
Average flow treated, mgd	146
Effluent P, mg/L	0.025
Percent of days in operation	73
Combined Effluent Data	
Effluent P, mg/L	0.0499
P inventory at end of period	
% in STA or FEB sediments	10.2
% in STA or FEB water column	0.0
% removed by chemical treatment	56.6
% in in system effluent	33.2
Sum of %	100.0

Table 1. Summary of STA/FEB/Chemical Treatment Calculations

System Description	Value
STA or FEB?	FEB
Type of chemical or polishing system	HRS
Overall treatment goal, mg/L P	0.05
EAA data	
Average flow, mgd	189
Influent P concentration, mg/L	0.150
Lake Okeechobee Data	
Average flow, mgd	1
Influent P concentration, mg/L	0.090
Rainfall and Evapotranspiration	
Average rainfall on STA or FEB, mgd	3
Average evapotranspiration from STA or FEB,mgd	4
STA/FEB Data	
Influent flow, mgd	190
Influent P concentration, mg/L	0.150
Settling rate, m/day	10.2
Area, acres	1000
Delta depth, ft	8.0
Volume, mgal	2607
Effluent P, mg/L	0.135
Wet period fraction	1.00
Chemical System Data	
Capacity, mgd	290
Average flow treated, mgd	147
Effluent P, mg/L	0.025
Percent of days in operation	73
Combined Effluent Data	
Effluent P, mg/L	0.0499
P inventory at end of period	
% in STA or FEB sediments	10.6
% in STA or FEB water column	0.0
% removed by chemical treatment	56.4
% in in system effluent	33.1
Sum of %	100.0

Table 1. Summary of STA/FEB/Chemical Treatment Calculations

System Description	Value
STA or FEB?	FEB
Type of chemical or polishing system	HRS
Overall treatment goal, mg/L P	0.05
EAA data	
Average flow, mgd	189
Influent P concentration, mg/L	0.150
Lake Okeechobee Data	
Average flow, mgd	2
Influent P concentration, mg/L	0.090
Rainfall and Evapotranspiration	
Average rainfall on STA or FEB, mgd	7
Average evapotranspiration from STA or FEB,mgd	8
STA/FEB Data	
Influent flow, mgd	191
Influent P concentration, mg/L	0.149
Settling rate, m/day	10.2
Area, acres	2000
Delta depth, ft	8.0
Volume, mgal	5213
Effluent P, mg/L	0.135
Wet period fraction	1.00
Chemical System Data	
Capacity, mgd	230
Average flow treated, mgd	146
Effluent P, mg/L	0.025
Percent of days in operation	77
Combined Effluent Data	
Effluent P, mg/L	0.0501
P inventory at end of period	
% in STA or FEB sediments	11.3
% in STA or FEB water column	0.0
% removed by chemical treatment	55.7
% in in system effluent	33.0
Sum of %	100.0

Table 1. Summary of STA/FEB/Chemical Treatment Calculations

	Value
System Description	
STA or FEB?	FEB
Type of chemical or polishing system	HRS
Overall treatment goal, mg/L P	0.05
EAA data	
Average flow, mgd	189
Influent P concentration, mg/L	0.150
Lake Okeechobee Data	
Average flow, mgd	1
Influent P concentration, mg/L	0.090
Rainfall and Evapotranspiration	
Average rainfall on STA or FEB, mgd	2
Average evapotranspiration from STA or FEB,mgd	2
STA/FEB Data	
Influent flow, mgd	190
Influent P concentration, mg/L	0.150
Settling rate, m/day	10.2
Area, acres	500
Delta depth, ft	8.0
Volume, mgal	1303
Effluent P, mg/L	0.135
Wet period fraction	1.00
Chemical System Data	
Capacity, mgd	504
Average flow treated, mgd	164
Effluent P, mg/L	0.025
Percent of days in operation	73
Combined Effluent Data	
Effluent P, mg/L	0.0400
P inventory at end of period	
% in STA or FEB sediments	10.2
% in STA or FEB water column	0.0
% removed by chemical treatment	63.2
% in in system effluent	26.6
Sum of %	100.0

Table 1. Summary of STA/FEB/Chemical Treatment Calculations

System Description	Value
STA or FEB?	FEB
Type of chemical or polishing system	HRS
Overall treatment goal, mg/L P	0.04
EAA data	
Average flow, mgd	189
Influent P concentration, mg/L	0.150
Lake Okeechobee Data	
Average flow, mgd	3
Influent P concentration, mg/L	0.090
Rainfall and Evapotranspiration	
Average rainfall on STA or FEB, mgd	10
Average evapotranspiration from STA or FEB,mgd	12
STA/FEB Data	
Influent flow, mgd	192
Influent P concentration, mg/L	0.149
Settling rate, m/day	10.2
Area, acres	3000
Delta depth, ft	8.0
Volume, mgal	7820
Effluent P, mg/L	0.134
Wet period fraction	1.00
Chemical System Data	
Capacity, mgd	281
Average flow treated, mgd	164
Effluent P, mg/L	0.025
Percent of days in operation	74
Combined Effluent Data	
Effluent P, mg/L	0.0400
P inventory at end of period	
% in STA or FEB sediments	11.9
% in STA or FEB water column	0.1
% removed by chemical treatment	61.8
% in in system effluent	26.2
Sum of %	100.0

Table 1. Summary of STA/FEB/Chemical Treatment Calculations

System Description	Value
STA or FEB?	FEB
Type of chemical or polishing system	HRS
Overall treatment goal, mg/L P	0.04
EAA data	
Average flow, mgd	189
Influent P concentration, mg/L	0.150
Lake Okeechobee Data	
Average flow, mgd	2
Influent P concentration, mg/L	0.090
Rainfall and Evapotranspiration	
Average rainfall on STA or FEB, mgd	7
Average evapotranspiration from STA or FEB,mgd	8
STA/FEB Data	
Influent flow, mgd	191
Influent P concentration, mg/L	0.149
Settling rate, m/day	10.2
Area, acres	2000
Delta depth, ft	8.0
Volume, mgal	5213
Effluent P, mg/L	0.135
Wet period fraction	1.00
Chemical System Data	
Capacity, mgd	330
Average flow treated, mgd	164
Effluent P, mg/L	0.025
Percent of days in operation	73
Combined Effluent Data	
Effluent P, mg/L	0.0400
P inventory at end of period	
% in STA or FEB sediments	11.3
% in STA or FEB water column	0.0
% removed by chemical treatment	62.4
% in in system effluent	26.4
Sum of %	100.0

Table 1. Summary of STA/FEB/Chemical Treatment Calculations

System Description	Value
STA or FEB?	FEB
Type of chemical or polishing system	HRS
Overall treatment goal, mg/L P	0.04
EAA data	
Average flow, mgd	189
Influent P concentration, mg/L	0.150
Lake Okeechobee Data	
Average flow, mgd	1
Influent P concentration, mg/L	0.090
Rainfall and Evapotranspiration	
Average rainfall on STA or FEB, mgd	3
Average evapotranspiration from STA or FEB,mgd	4
STA/FEB Data	
Influent flow, mgd	190
Influent P concentration, mg/L	0.150
Settling rate, m/day	10.2
Area, acres	1000
Delta depth, ft	8.0
Volume, mgal	2607
Effluent P, mg/L	0.135
Wet period fraction	1.00
Chemical System Data	
Capacity, mgd	407
Average flow treated, mgd	164
Effluent P, mg/L	0.025
Percent of days in operation	71
Combined Effluent Data	
Effluent P, mg/L	0.0400
P inventory at end of period	
% in STA or FEB sediments	10.6
% in STA or FEB water column	0.0
% removed by chemical treatment	62.9
% in in system effluent	26.5
Sum of %	100.0

Table 1. Summary of STA/FEB/Chemical Treatment Calculations

System Description	Value
STA or FEB?	FEB
Type of chemical or polishing system	HRS
Overall treatment goal, mg/L P	0.03
EAA data	
Average flow, mgd	189
Influent P concentration, mg/L	0.150
Lake Okeechobee Data	
Average flow, mgd	1
Influent P concentration, mg/L	0.090
Rainfall and Evapotranspiration	
Average rainfall on STA or FEB, mgd	2
Average evapotranspiration from STA or FEB,mgd	2
STA/FEB Data	
Influent flow, mgd	190
Influent P concentration, mg/L	0.150
Settling rate, m/day	10.2
Area, acres	500
Delta depth, ft	8.0
Volume, mgal	1303
Effluent P, mg/L	0.135
Wet period fraction	1.00
Chemical System Data	
Capacity, mgd	805
Average flow treated, mgd	181
Effluent P, mg/L	0.025
Percent of days in operation	72
Combined Effluent Data	
Effluent P, mg/L	0.0300
P inventory at end of period	
% in STA or FEB sediments	10.2
% in STA or FEB water column	0.0
% removed by chemical treatment	69.8
% in in system effluent	19.9
Sum of %	100.0

Table 1. Summary of STA/FEB/Chemical Treatment Calculations

System Description	Value
STA or FEB?	FEB
Type of chemical or polishing system	HRS
Overall treatment goal, mg/L P	0.03
EAA data	
Average flow, mgd	189
Influent P concentration, mg/L	0.150
Lake Okeechobee Data	
Average flow, mgd	1
Influent P concentration, mg/L	0.090
Rainfall and Evapotranspiration	
Average rainfall on STA or FEB, mgd	3
Average evapotranspiration from STA or FEB,mgd	4
STA/FEB Data	
Influent flow, mgd	190
Influent P concentration, mg/L	0.150
Settling rate, m/day	10.2
Area, acres	1000
Delta depth, ft	8.0
Volume, mgal	2607
Effluent P, mg/L	0.135
Wet period fraction	1.00
Chemical System Data	
Capacity, mgd	674
Average flow treated, mgd	181
Effluent P, mg/L	0.025
Percent of days in operation	70
Combined Effluent Data	
Effluent P, mg/L	0.0300
P inventory at end of period	
% in STA or FEB sediments	10.6
% in STA or FEB water column	0.0
% removed by chemical treatment	69.5
% in in system effluent	19.9
Sum of %	100.0

Table 1. Summary of STA/FEB/Chemical Treatment Calculations

System Description	Value
STA or FEB?	FEB
Type of chemical or polishing system	HRS
Overall treatment goal, mg/L P	0.03
EAA data	
Average flow, mgd	189
Influent P concentration, mg/L	0.150
Lake Okeechobee Data	
Average flow, mgd	2
Influent P concentration, mg/L	0.090
Rainfall and Evapotranspiration	
Average rainfall on STA or FEB, mgd	7
Average evapotranspiration from STA or FEB,mgd	8
STA/FEB Data	
Influent flow, mgd	191
Influent P concentration, mg/L	0.149
Settling rate, m/day	10.2
Area, acres	2000
Delta depth, ft	8.0
Volume, mgal	5213
Effluent P, mg/L	0.135
Wet period fraction	1.00
Chemical System Data	
Capacity, mgd	539
Average flow treated, mgd	182
Effluent P, mg/L	0.025
Percent of days in operation	70
Combined Effluent Data	
Effluent P, mg/L	0.0300
P inventory at end of period	
% in STA or FEB sediments	11.3
% in STA or FEB water column	0.0
% removed by chemical treatment	69.0
% in in system effluent	19.8
Sum of %	100.0

Table 1. Summary of STA/FEB/Chemical Treatment Calculations

System Description	Value
STA or FEB?	FEB
Type of chemical or polishing system	HRS
Overall treatment goal, mg/L P	0.03
EAA data	
Average flow, mgd	189
Influent P concentration, mg/L	0.150
Lake Okeechobee Data	
Average flow, mgd	3
Influent P concentration, mg/L	0.090
Rainfall and Evapotranspiration	
Average rainfall on STA or FEB, mgd	10
Average evapotranspiration from STA or FEB,mgd	12
STA/FEB Data	
Influent flow, mgd	192
Influent P concentration, mg/L	0.149
Settling rate, m/day	10.2
Area, acres	3000
Delta depth, ft	8.0
Volume, mgal	7820
Effluent P, mg/L	0.134
Wet period fraction	1.00
Chemical System Data	
Capacity, mgd	453
Average flow treated, mgd	182
Effluent P, mg/L	0.025
Percent of days in operation	68
Combined Effluent Data	
Effluent P, mg/L	0.0300
P inventory at end of period	
% in STA or FEB sediments	11.9
% in STA or FEB water column	0.0
% removed by chemical treatment	68.4
% in in system effluent	19.7
Sum of %	100.0

Table 1. Summary of STA/FEB/Chemical Treatment Calculations

System Description	Value
STA or FEB?	FEB
Type of chemical or polishing system	HRS
Overall treatment goal, mg/L P	0.03
EAA data	
Average flow, mgd	189
Influent P concentration, mg/L	0.150
Lake Okeechobee Data	
Average flow, mgd	4
Influent P concentration, mg/L	0.090
Rainfall and Evapotranspiration	
Average rainfall on STA or FEB, mgd	13
Average evapotranspiration from STA or FEB,mgd	16
STA/FEB Data	
Influent flow, mgd	194
Influent P concentration, mg/L	0.149
Settling rate, m/day	10.2
Area, acres	4000
Delta depth, ft	8.0
Volume, mgal	10427
Effluent P, mg/L	0.134
Wet period fraction	1.00
Chemical System Data	
Capacity, mgd	416
Average flow treated, mgd	182
Effluent P, mg/L	0.025
Percent of days in operation	68
Combined Effluent Data	
Effluent P, mg/L	0.0300
P inventory at end of period	
% in STA or FEB sediments	12.6
% in STA or FEB water column	0.0
% removed by chemical treatment	67.8
% in in system effluent	19.6
Sum of %	100.0

Table 1. Summary of STA/FEB/Chemical Treatment Calculations

System Description	Value
STA or FEB?	FEB
Type of chemical or polishing system	HRS
Overall treatment goal, mg/L P	0.01
EAA data	
Average flow, mgd	189
Influent P concentration, mg/L	0.090
Lake Okeechobee Data	
Average flow, mgd	1
Influent P concentration, mg/L	0.090
Rainfall and Evapotranspiration	
Average rainfall on STA or FEB, mgd	3
Average evapotranspiration from STA or FEB,mgd	4
STA/FEB Data	
Influent flow, mgd	190
Influent P concentration, mg/L	0.090
Settling rate, m/day	10.2
Area, acres	1000
Delta depth, ft	8.0
Volume, mgal	2607
Effluent P, mg/L	0.081
Wet period fraction	1.00
Chemical System Data	
Capacity, mgd	112
Average flow treated, mgd	91
Effluent P, mg/L	0.016
Percent of days in operation	86
Combined Effluent Data	
Effluent P, mg/L	0.0499
P inventory at end of period	
% in STA or FEB sediments	10.8
% in STA or FEB water column	0.0
% removed by chemical treatment	34.3
% in in system effluent	54.9
Sum of %	100.0

Table 1. Summary of STA/FEB/Chemical Treatment Calculations

System Description	Value
STA or FEB?	FEB
Type of chemical or polishing system	HRS
Overall treatment goal, mg/L P	0.01
EAA data	
Average flow, mgd	189
Influent P concentration, mg/L	0.090
Lake Okeechobee Data	
Average flow, mgd	0
Influent P concentration, mg/L	0.090
Rainfall and Evapotranspiration	
Average rainfall on STA or FEB, mgd	2
Average evapotranspiration from STA or FEB,mgd	2
STA/FEB Data	
Influent flow, mgd	190
Influent P concentration, mg/L	0.090
Settling rate, m/day	10.2
Area, acres	500
Delta depth, ft	8.0
Volume, mgal	1303
Effluent P, mg/L	0.081
Wet period fraction	1.00
Chemical System Data	
Capacity, mgd	131
Average flow treated, mgd	91
Effluent P, mg/L	0.016
Percent of days in operation	80
Combined Effluent Data	
Effluent P, mg/L	0.0499
P inventory at end of period	
% in STA or FEB sediments	10.4
% in STA or FEB water column	0.0
% removed by chemical treatment	34.4
% in in system effluent	55.2
Sum of %	100.0

Table 1. Summary of STA/FEB/Chemical Treatment Calculations

System Description	Value
STA or FEB?	FEB
Type of chemical or polishing system	HRS
Overall treatment goal, mg/L P	0.01
EAA data	
Average flow, mgd	189
Influent P concentration, mg/L	0.090
Lake Okeechobee Data	
Average flow, mgd	0
Influent P concentration, mg/L	0.090
Rainfall and Evapotranspiration	
Average rainfall on STA or FEB, mgd	0
Average evapotranspiration from STA or FEB,mgd	0
STA/FEB Data	
Influent flow, mgd	189
Influent P concentration, mg/L	0.090
Settling rate, m/day	10.2
Area, acres	100
Delta depth, ft	8.0
Volume, mgal	261
Effluent P, mg/L	0.081
Wet period fraction	1.00
Chemical System Data	
Capacity, mgd	172
Average flow treated, mgd	90
Effluent P, mg/L	0.016
Percent of days in operation	75
Combined Effluent Data	
Effluent P, mg/L	0.0500
P inventory at end of period	
% in STA or FEB sediments	10.0
% in STA or FEB water column	0.0
% removed by chemical treatment	34.5
% in in system effluent	55.5
Sum of %	100.0

Table 1. Summary of STA/FEB/Chemical Treatment Calculations

System Description	Value
STA or FEB?	FEB
Type of chemical or polishing system	HRS
Overall treatment goal, mg/L P	0.01
EAA data	
Average flow, mgd	189
Influent P concentration, mg/L	0.090
Lake Okeechobee Data	
Average flow, mgd	1
Influent P concentration, mg/L	0.090
Rainfall and Evapotranspiration	
Average rainfall on STA or FEB, mgd	5
Average evapotranspiration from STA or FEB,mgd	6
STA/FEB Data	
Influent flow, mgd	190
Influent P concentration, mg/L	0.090
Settling rate, m/day	10.2
Area, acres	1500
Delta depth, ft	8.0
Volume, mgal	3910
Effluent P, mg/L	0.081
Wet period fraction	1.00
Chemical System Data	
Capacity, mgd	162
Average flow treated, mgd	119
Effluent P, mg/L	0.016
Percent of days in operation	82
Combined Effluent Data	
Effluent P, mg/L	0.0400
P inventory at end of period	
% in STA or FEB sediments	11.3
% in STA or FEB water column	0.0
% removed by chemical treatment	44.9
% in in system effluent	43.7
Sum of %	100.0

Table 1. Summary of STA/FEB/Chemical Treatment Calculations

System Description	Value
STA or FEB?	FEB
Type of chemical or polishing system	HRS
Overall treatment goal, mg/L P	0.01
EAA data	
Average flow, mgd	189
Influent P concentration, mg/L	0.090
Lake Okeechobee Data	
Average flow, mgd	1
Influent P concentration, mg/L	0.090
Rainfall and Evapotranspiration	
Average rainfall on STA or FEB, mgd	3
Average evapotranspiration from STA or FEB,mgd	4
STA/FEB Data	
Influent flow, mgd	190
Influent P concentration, mg/L	0.090
Settling rate, m/day	10.2
Area, acres	1000
Delta depth, ft	8.0
Volume, mgal	2607
Effluent P, mg/L	0.081
Wet period fraction	1.00
Chemical System Data	
Capacity, mgd	182
Average flow treated, mgd	120
Effluent P, mg/L	0.016
Percent of days in operation	78
Combined Effluent Data	
Effluent P, mg/L	0.0400
P inventory at end of period	
% in STA or FEB sediments	10.8
% in STA or FEB water column	0.0
% removed by chemical treatment	45.2
% in in system effluent	43.9
Sum of %	100.0

Table 1. Summary of STA/FEB/Chemical Treatment Calculations

System Description	Value
STA or FEB?	FEB
Type of chemical or polishing system	HRS
Overall treatment goal, mg/L P	0.01
EAA data	
Average flow, mgd	189
Influent P concentration, mg/L	0.090
Lake Okeechobee Data	
Average flow, mgd	0
Influent P concentration, mg/L	0.090
Rainfall and Evapotranspiration	
Average rainfall on STA or FEB, mgd	2
Average evapotranspiration from STA or FEB,mgd	2
STA/FEB Data	
Influent flow, mgd	190
Influent P concentration, mg/L	0.090
Settling rate, m/day	10.2
Area, acres	500
Delta depth, ft	8.0
Volume, mgal	1303
Effluent P, mg/L	0.081
Wet period fraction	1.00
Chemical System Data	
Capacity, mgd	218
Average flow treated, mgd	120
Effluent P, mg/L	0.016
Percent of days in operation	75
Combined Effluent Data	
Effluent P, mg/L	0.0400
P inventory at end of period	
% in STA or FEB sediments	10.4
% in STA or FEB water column	0.0
% removed by chemical treatment	45.5
% in in system effluent	44.2
Sum of %	100.0

Table 1. Summary of STA/FEB/Chemical Treatment Calculations

System Description	Value
STA or FEB?	FEB
Type of chemical or polishing system	HRS
Overall treatment goal, mg/L P	0.01
EAA data	
Average flow, mgd	189
Influent P concentration, mg/L	0.090
Lake Okeechobee Data	
Average flow, mgd	0
Influent P concentration, mg/L	0.090
Rainfall and Evapotranspiration	
Average rainfall on STA or FEB, mgd	1
Average evapotranspiration from STA or FEB,mgd	1
STA/FEB Data	
Influent flow, mgd	189
Influent P concentration, mg/L	0.090
Settling rate, m/day	10.2
Area, acres	300
Delta depth, ft	8.0
Volume, mgal	782
Effluent P, mg/L	0.081
Wet period fraction	1.00
Chemical System Data	
Capacity, mgd	243
Average flow treated, mgd	120
Effluent P, mg/L	0.016
Percent of days in operation	74
Combined Effluent Data	
Effluent P, mg/L	0.0400
P inventory at end of period	
% in STA or FEB sediments	10.2
% in STA or FEB water column	0.0
% removed by chemical treatment	45.5
% in in system effluent	44.3
Sum of %	100.0

Table 1. Summary of STA/FEB/Chemical Treatment Calculations

System Description	Value
STA or FEB?	FEB
Type of chemical or polishing system	HRS
Overall treatment goal, mg/L P	0.01
EAA data	
Average flow, mgd	189
Influent P concentration, mg/L	0.090
Lake Okeechobee Data	
Average flow, mgd	0
Influent P concentration, mg/L	0.090
Rainfall and Evapotranspiration	
Average rainfall on STA or FEB, mgd	0
Average evapotranspiration from STA or FEB,mgd	0
STA/FEB Data	
Influent flow, mgd	189
Influent P concentration, mg/L	0.090
Settling rate, m/day	10.2
Area, acres	100
Delta depth, ft	8.0
Volume, mgal	261
Effluent P, mg/L	0.081
Wet period fraction	1.00
Chemical System Data	
Capacity, mgd	290
Average flow treated, mgd	119
Effluent P, mg/L	0.016
Percent of days in operation	74
Combined Effluent Data	
Effluent P, mg/L	0.0400
P inventory at end of period	
% in STA or FEB sediments	10.1
% in STA or FEB water column	0.0
% removed by chemical treatment	45.5
% in in system effluent	44.4
Sum of %	100.0

Table 1. Summary of STA/FEB/Chemical Treatment Calculations

System Description	Value
STA or FEB?	FEB
Type of chemical or polishing system	HRS
Overall treatment goal, mg/L P	0.01
EAA data	
Average flow, mgd	189
Influent P concentration, mg/L	0.090
Lake Okeechobee Data	
Average flow, mgd	2
Influent P concentration, mg/L	0.090
Rainfall and Evapotranspiration	
Average rainfall on STA or FEB, mgd	7
Average evapotranspiration from STA or FEB,mgd	8
STA/FEB Data	
Influent flow, mgd	191
Influent P concentration, mg/L	0.090
Settling rate, m/day	10.2
Area, acres	2000
Delta depth, ft	8.0
Volume, mgal	5213
Effluent P, mg/L	0.081
Wet period fraction	1.00
Chemical System Data	
Capacity, mgd	241
Average flow treated, mgd	149
Effluent P, mg/L	0.016
Percent of days in operation	77
Combined Effluent Data	
Effluent P, mg/L	0.0300
P inventory at end of period	
% in STA or FEB sediments	11.8
% in STA or FEB water column	0.0
% removed by chemical treatment	55.6
% in in system effluent	32.7
Sum of %	100.0

Table 1. Summary of STA/FEB/Chemical Treatment Calculations

System Description	Value
STA or FEB?	FEB
Type of chemical or polishing system	HRS
Overall treatment goal, mg/L P	0.01
EAA data	
Average flow, mgd	189
Influent P concentration, mg/L	0.090
Lake Okeechobee Data	
Average flow, mgd	1
Influent P concentration, mg/L	0.090
Rainfall and Evapotranspiration	
Average rainfall on STA or FEB, mgd	3
Average evapotranspiration from STA or FEB,mgd	4
STA/FEB Data	
Influent flow, mgd	190
Influent P concentration, mg/L	0.090
Settling rate, m/day	10.2
Area, acres	1000
Delta depth, ft	8.0
Volume, mgal	2607
Effluent P, mg/L	0.081
Wet period fraction	1.00
Chemical System Data	
Capacity, mgd	302
Average flow treated, mgd	149
Effluent P, mg/L	0.016
Percent of days in operation	73
Combined Effluent Data	
Effluent P, mg/L	0.0300
P inventory at end of period	
% in STA or FEB sediments	10.8
% in STA or FEB water column	0.0
% removed by chemical treatment	56.2
% in in system effluent	33.0
Sum of %	100.0

Table 1. Summary of STA/FEB/Chemical Treatment Calculations

System Description	Value
STA or FEB?	FEB
Type of chemical or polishing system	HRS
Overall treatment goal, mg/L P	0.01
EAA data	
Average flow, mgd	189
Influent P concentration, mg/L	0.090
Lake Okeechobee Data	
Average flow, mgd	1
Influent P concentration, mg/L	0.090
Rainfall and Evapotranspiration	
Average rainfall on STA or FEB, mgd	2
Average evapotranspiration from STA or FEB,mgd	2
STA/FEB Data	
Influent flow, mgd	190
Influent P concentration, mg/L	0.090
Settling rate, m/day	10.2
Area, acres	500
Delta depth, ft	8.0
Volume, mgal	1303
Effluent P, mg/L	0.081
Wet period fraction	1.00
Chemical System Data	
Capacity, mgd	365
Average flow treated, mgd	149
Effluent P, mg/L	0.016
Percent of days in operation	73
Combined Effluent Data	
Effluent P, mg/L	0.0300
P inventory at end of period	
% in STA or FEB sediments	10.4
% in STA or FEB water column	0.0
% removed by chemical treatment	56.5
% in in system effluent	33.2
Sum of %	100.0

Table 1. Summary of STA/FEB/Chemical Treatment Calculations

System Description	Value
STA or FEB?	FEB
Type of chemical or polishing system	HRS
Overall treatment goal, mg/L P	0.01
EAA data	
Average flow, mgd	189
Influent P concentration, mg/L	0.090
Lake Okeechobee Data	
Average flow, mgd	3
Influent P concentration, mg/L	0.090
Rainfall and Evapotranspiration	
Average rainfall on STA or FEB, mgd	8
Average evapotranspiration from STA or FEB,mgd	10
STA/FEB Data	
Influent flow, mgd	192
Influent P concentration, mg/L	0.090
Settling rate, m/day	10.2
Area, acres	2500
Delta depth, ft	8.0
Volume, mgal	6517
Effluent P, mg/L	0.081
Wet period fraction	1.00
Chemical System Data	
Capacity, mgd	435
Average flow treated, mgd	179
Effluent P, mg/L	0.016
Percent of days in operation	70
Combined Effluent Data	
Effluent P, mg/L	0.0200
P inventory at end of period	
% in STA or FEB sediments	12.2
% in STA or FEB water column	0.0
% removed by chemical treatment	66.1
% in in system effluent	21.7
Sum of %	100.0

Table 1. Summary of STA/FEB/Chemical Treatment Calculations

System Description	Value
STA or FEB?	FEB
Type of chemical or polishing system	HRS
Overall treatment goal, mg/L P	0.01
EAA data	
Average flow, mgd	189
Influent P concentration, mg/L	0.090
Lake Okeechobee Data	
Average flow, mgd	2
Influent P concentration, mg/L	0.090
Rainfall and Evapotranspiration	
Average rainfall on STA or FEB, mgd	7
Average evapotranspiration from STA or FEB,mgd	8
STA/FEB Data	
Influent flow, mgd	191
Influent P concentration, mg/L	0.090
Settling rate, m/day	10.2
Area, acres	2000
Delta depth, ft	8.0
Volume, mgal	5213
Effluent P, mg/L	0.081
Wet period fraction	1.00
Chemical System Data	
Capacity, mgd	470
Average flow treated, mgd	178
Effluent P, mg/L	0.016
Percent of days in operation	70
Combined Effluent Data	
Effluent P, mg/L	0.0200
P inventory at end of period	
% in STA or FEB sediments	11.8
% in STA or FEB water column	0.0
% removed by chemical treatment	66.4
% in in system effluent	21.8
Sum of %	100.0

Table 1. Summary of STA/FEB/Chemical Treatment Calculations

System Description	Value
STA or FEB?	FEB
Type of chemical or polishing system	HRS
Overall treatment goal, mg/L P	0.01
EAA data	
Average flow, mgd	189
Influent P concentration, mg/L	0.090
Lake Okeechobee Data	
Average flow, mgd	1
Influent P concentration, mg/L	0.090
Rainfall and Evapotranspiration	
Average rainfall on STA or FEB, mgd	3
Average evapotranspiration from STA or FEB,mgd	4
STA/FEB Data	
Influent flow, mgd	190
Influent P concentration, mg/L	0.090
Settling rate, m/day	10.2
Area, acres	1000
Delta depth, ft	8.0
Volume, mgal	2607
Effluent P, mg/L	0.081
Wet period fraction	1.00
Chemical System Data	
Capacity, mgd	605
Average flow treated, mgd	178
Effluent P, mg/L	0.016
Percent of days in operation	70
Combined Effluent Data	
Effluent P, mg/L	0.0200
P inventory at end of period	
% in STA or FEB sediments	10.8
% in STA or FEB water column	0.0
% removed by chemical treatment	67.2
% in in system effluent	22.0
Sum of %	100.0

Table 1. Summary of STA/FEB/Chemical Treatment Calculations

System Description	Value
STA or FEB?	FEB
Type of chemical or polishing system	HRS
Overall treatment goal, mg/L P	0.01
EAA data	
Average flow, mgd	189
Influent P concentration, mg/L	0.090
Lake Okeechobee Data	
Average flow, mgd	1
Influent P concentration, mg/L	0.090
Rainfall and Evapotranspiration	
Average rainfall on STA or FEB, mgd	2
Average evapotranspiration from STA or FEB,mgd	2
STA/FEB Data	
Influent flow, mgd	190
Influent P concentration, mg/L	0.090
Settling rate, m/day	10.2
Area, acres	500
Delta depth, ft	8.0
Volume, mgal	1303
Effluent P, mg/L	0.081
Wet period fraction	1.00
Chemical System Data	
Capacity, mgd	735
Average flow treated, mgd	178
Effluent P, mg/L	0.016
Percent of days in operation	72
Combined Effluent Data	
Effluent P, mg/L	0.0200
P inventory at end of period	
% in STA or FEB sediments	10.4
% in STA or FEB water column	0.0
% removed by chemical treatment	67.6
% in in system effluent	22.1
Sum of %	100.0

STA - CHEMICAL TREATMENT/ HIGH RATE SETTLING

Table 1. Summary of STA/FEB/Chemical Treatment Calculations

System Description	Value
STA or FEB?	STA
Type of chemical or polishing system	yes
Overall treatment goal, mg/L P	0.01
EAA data	
Average flow, mgd	189
Influent P concentration, mg/L	0.150
Lake Okeechobee Data	
Average flow, mgd	0
Influent P concentration, mg/L	0.090
Rainfall and Evapotranspiration	
Average rainfall on STA or FEB, mgd	25
Average evapotranspiration from STA or FEB,mgd	29
STA/FEB Data	
Influent flow, mgd	190
Influent P concentration, mg/L	0.150
Settling rate, m/day	10.2
Area, acres	7410
Delta depth, ft	4.0
Volume, mgal	9658
Effluent P, mg/L	0.050
Wet period fraction	1.00
Chemical System Data	
Capacity, mgd	49
Average flow treated, mgd	48
Effluent P, mg/L	0.012
Percent of days in operation	98
Combined Effluent Data	
Effluent P, mg/L	0.0400
P inventory at end of period	
% in STA or FEB sediments	68.4
% in STA or FEB water column	0.4
% removed by chemical treatment	6.3
% in in system effluent	24.9
Sum of %	100.0

Table 1. Summary of STA/FEB/Chemical Treatment Calculations

System Description	Value
STA or FEB?	STA
Type of chemical or polishing system	HRS
Overall treatment goal, mg/L P	0.01
EAA data	
Average flow, mgd	189
Influent P concentration, mg/L	0.150
Lake Okeechobee Data	
Average flow, mgd	2
Influent P concentration, mg/L	0.090
Rainfall and Evapotranspiration	
Average rainfall on STA or FEB, mgd	25
Average evapotranspiration from STA or FEB,mgd	29
STA/FEB Data	
Influent flow, mgd	191
Influent P concentration, mg/L	0.149
Settling rate, m/day	10.2
Area, acres	7410
Delta depth, ft	4.0
Volume, mgal	9658
Effluent P, mg/L	0.050
Wet period fraction	1.00
Chemical System Data	
Capacity, mgd	107
Average flow treated, mgd	98
Effluent P, mg/L	0.012
Percent of days in operation	92
Combined Effluent Data	
Effluent P, mg/L	0.0300
P inventory at end of period	
% in STA or FEB sediments	68.2
% in STA or FEB water column	0.3
% removed by chemical treatment	12.7
% in in system effluent	18.8
Sum of %	100.0

Table 1. Summary of STA/FEB/Chemical Treatment Calculations

System Description	Value
STA or FEB?	STA
Type of chemical or polishing system	HRS
Overall treatment goal, mg/L P	0.01
EAA data	
Average flow, mgd	189
Influent P concentration, mg/L	0.150
Lake Okeechobee Data	
Average flow, mgd	6
Influent P concentration, mg/L	0.090
Rainfall and Evapotranspiration	
Average rainfall on STA or FEB, mgd	25
Average evapotranspiration from STA or FEB,mgd	29
STA/FEB Data	
Influent flow, mgd	195
Influent P concentration, mg/L	0.148
Settling rate, m/day	10.2
Area, acres	7410
Delta depth, ft	4.0
Volume, mgal	9658
Effluent P, mg/L	0.051
Wet period fraction	1.00
Chemical System Data	
Capacity, mgd	209
Average flow treated, mgd	150
Effluent P, mg/L	0.012
Percent of days in operation	78
Combined Effluent Data	
Effluent P, mg/L	0.0200
P inventory at end of period	
% in STA or FEB sediments	67.5
% in STA or FEB water column	0.2
% removed by chemical treatment	19.7
% in in system effluent	12.7
Sum of %	100.0

Table 1. Summary of STA/FEB/Chemical Treatment Calculations

System Description	Value
STA or FEB?	STA
Type of chemical or polishing system	HRS
Overall treatment goal, mg/L P	0.01
EAA data	
Average flow, mgd	189
Influent P concentration, mg/L	0.090
Lake Okeechobee Data	
Average flow, mgd	1
Influent P concentration, mg/L	0.090
Rainfall and Evapotranspiration	
Average rainfall on STA or FEB, mgd	13
Average evapotranspiration from STA or FEB,mgd	16
STA/FEB Data	
Influent flow, mgd	190
Influent P concentration, mg/L	0.090
Settling rate, m/day	10.2
Area, acres	4040
Delta depth, ft	4.0
Volume, mgal	5265
Effluent P, mg/L	0.050
Wet period fraction	1.00
Chemical System Data	
Capacity, mgd	51
Average flow treated, mgd	49
Effluent P, mg/L	0.012
Percent of days in operation	97
Combined Effluent Data	
Effluent P, mg/L	0.0400
P inventory at end of period	
% in STA or FEB sediments	46.7
% in STA or FEB water column	0.3
% removed by chemical treatment	10.7
% in in system effluent	42.4
Sum of %	100.0

Table 1. Summary of STA/FEB/Chemical Treatment Calculations

System Description	Value
STA or FEB?	STA
Type of chemical or polishing system	HZS
Overall treatment goal, mg/L P	0.01
EAA data	
Average flow, mgd	189
Influent P concentration, mg/L	0.090
Lake Okeechobee Data	
Average flow, mgd	2
Influent P concentration, mg/L	0.090
Rainfall and Evapotranspiration	
Average rainfall on STA or FEB, mgd	13
Average evapotranspiration from STA or FEB,mgd	16
STA/FEB Data	
Influent flow, mgd	191
Influent P concentration, mg/L	0.090
Settling rate, m/day	10.2
Area, acres	4040
Delta depth, ft	4.0
Volume, mgal	5265
Effluent P, mg/L	0.050
Wet period fraction	1.00
Chemical System Data	
Capacity, mgd	116
Average flow treated, mgd	99
Effluent P, mg/L	0.012
Percent of days in operation	88
Combined Effluent Data	
Effluent P, mg/L	0.0300
P inventory at end of period	
% in STA or FEB sediments	46.5
% in STA or FEB water column	0.2
% removed by chemical treatment	21.5
% in in system effluent	31.8
Sum of %	100.0

Table 1. Summary of STA/FEB/Chemical Treatment Calculations

System Description	Value
STA or FEB?	STA
Type of chemical or polishing system	HRS
Overall treatment goal, mg/L P	0.01
EAA data	
Average flow, mgd	189
Influent P concentration, mg/L	0.090
Lake Okeechobee Data	
Average flow, mgd	4
Influent P concentration, mg/L	0.090
Rainfall and Evapotranspiration	
Average rainfall on STA or FEB, mgd	13
Average evapotranspiration from STA or FEB,mgd	16
STA/FEB Data	
Influent flow, mgd	193
Influent P concentration, mg/L	0.090
Settling rate, m/day	10.2
Area, acres	4040
Delta depth, ft	4.0
Volume, mgal	5265
Effluent P, mg/L	0.051
Wet period fraction	1.00
Chemical System Data	
Capacity, mgd	257
Average flow treated, mgd	151
Effluent P, mg/L	0.012
Percent of days in operation	72
Combined Effluent Data	
Effluent P, mg/L	0.0200
P inventory at end of period	
% in STA or FEB sediments	46.1
% in STA or FEB water column	0.0
% removed by chemical treatment	32.6
% in in system effluent	21.3
Sum of %	100.0

APPENDIX G

SENSITIVITY ON FEB PARTICULATE REMOVAL

Sensitivity Analysis

Tabulation of calculations

Treatment train Direct Filtration C:\EVERGL\DATASH

Influent P, ppb	Particulate P in influent, %	Particulate P removed in FEB, %	Treatment goal, ppb P	Treatment plant effluent P, ppb	FEB, acres	Plant capacity, mgd	Average plant flow, mgd	Present worth, $ million
		30						
	all the way	all the way						
150	30	33	30	9.0	500	442	158	263.99
					1000	360	158	261.14
					2000	290	158	268.39
					4000	218	157	291.66
150	30	33	10	9.0	500	1075	188	369.13
					1000	950	188	360.32
					2000	790	189	355.70
					2500	710	189	353.08
					4000	575	190	360.33
90	30	33	30	9.0	300	315	134	229.00
					500	281	134	227.70
					1000	234	134	229.69
					2000	189	134	240.40
					2500	176	134	247.06
					4000	154.5	132	268.28
					5000	148	131	283.69
90	30	33	10	9.0	500	990	187	356.78
					1000	880	187	350.05
					2000	720	188	345.42
					2500	660	188	345.58
					4000	535	189	354.21
150	30	33	10	9.0	2200	756	189	354.38
					3000	655	189	353.92
					2750	680	189	353.16

Table 1. Summary of STA/FEB/Chemical Treatment Calculations

System Description	Value
STA or FEB?	FEB
Type of chemical or polishing system	Direct Filtration
Overall treatment goal, mg/L P	0.01
EAA data	
Average flow, mgd	189
Influent P concentration, mg/L	0.090
Lake Okeechobee Data	
Average flow, mgd	5
Influent P concentration, mg/L	0.090
Rainfall and Evapotranspiration	
Average rainfall on STA or FEB, mgd	13
Average evapotranspiration from STA or FEB,mgd	16
STA/FEB Data	
Influent flow, mgd	194
Influent P concentration, mg/L	0.090
Settling rate, m/day	10.2
Area, acres	4000
Delta depth, ft	8.0
Volume, mgal	10427
Effluent P, mg/L	0.090
Wet period fraction	1.00
Chemical System Data	
Capacity, mgd	545
Average flow treated, mgd	189
Effluent P, mg/L	0.009
Percent of days in operation	66
Combined Effluent Data	
Effluent P, mg/L	0.0100
P inventory at end of period	
% in STA or FEB sediments	4.0
% in STA or FEB water column	0.0
% removed by chemical treatment	85.3
% in in system effluent	10.7
Sum of %	100.0

Table 1. Summary of STA/FEB/Chemical Treatment Calculations

System Description	Value
STA or FEB?	FEB
Type of chemical or polishing system	Direct Filtration
Overall treatment goal, mg/L P	0.03
EAA data	
Average flow, mgd	189
Influent P concentration, mg/L	0.150
Lake Okeechobee Data	
Average flow, mgd	1
Influent P concentration, mg/L	0.090
Rainfall and Evapotranspiration	
Average rainfall on STA or FEB, mgd	3
Average evapotranspiration from STA or FEB,mgd	4
STA/FEB Data	
Influent flow, mgd	190
Influent P concentration, mg/L	0.150
Settling rate, m/day	10.2
Area, acres	1000
Delta depth, ft	8.0
Volume, mgal	2607
Effluent P, mg/L	0.135
Wet period fraction	1.00
Chemical System Data	
Capacity, mgd	360
Average flow treated, mgd	158
Effluent P, mg/L	0.009
Percent of days in operation	72
Combined Effluent Data	
Effluent P, mg/L	0.0300
P inventory at end of period	
% in STA or FEB sediments	10.6
% in STA or FEB water column	0.0
% removed by chemical treatment	69.5
% in in system effluent	19.9
Sum of %	100.0

Table 1. Summary of STA/FEB/Chemical Treatment Calculations

System Description	Value
STA or FEB?	FEB
Type of chemical or polishing system	Direct Filtration
Overall treatment goal, mg/L P	0.03
EAA data	
Average flow, mgd	189
Influent P concentration, mg/L	0.150
Lake Okeechobee Data	
Average flow, mgd	2
Influent P concentration, mg/L	0.090
Rainfall and Evapotranspiration	
Average rainfall on STA or FEB, mgd	7
Average evapotranspiration from STA or FEB,mgd	8
STA/FEB Data	
Influent flow, mgd	191
Influent P concentration, mg/L	0.149
Settling rate, m/day	10.2
Area, acres	2000
Delta depth, ft	8.0
Volume, mgal	5213
Effluent P, mg/L	0.135
Wet period fraction	1.00
Chemical System Data	
Capacity, mgd	290
Average flow treated, mgd	158
Effluent P, mg/L	0.009
Percent of days in operation	74
Combined Effluent Data	
Effluent P, mg/L	0.0300
P inventory at end of period	
% in STA or FEB sediments	11.3
% in STA or FEB water column	0.0
% removed by chemical treatment	69.0
% in in system effluent	19.8
Sum of %	100.0

Table 1. Summary of STA/FEB/Chemical Treatment Calculations

System Description	Value
STA or FEB?	FEB
Type of chemical or polishing system	Direct Filtration
Overall treatment goal, mg/L P	0.03
EAA data	
Average flow, mgd	189
Influent P concentration, mg/L	0.150
Lake Okeechobee Data	
Average flow, mgd	3
Influent P concentration, mg/L	0.090
Rainfall and Evapotranspiration	
Average rainfall on STA or FEB, mgd	13
Average evapotranspiration from STA or FEB,mgd	16
STA/FEB Data	
Influent flow, mgd	192
Influent P concentration, mg/L	0.149
Settling rate, m/day	10.2
Area, acres	4000
Delta depth, ft	8.0
Volume, mgal	10427
Effluent P, mg/L	0.134
Wet period fraction	1.00
Chemical System Data	
Capacity, mgd	218
Average flow treated, mgd	157
Effluent P, mg/L	0.009
Percent of days in operation	80
Combined Effluent Data	
Effluent P, mg/L	0.0299
P inventory at end of period	
% in STA or FEB sediments	12.6
% in STA or FEB water column	0.6
% removed by chemical treatment	67.5
% in in system effluent	19.3
Sum of %	100.0

Table 1. Summary of STA/FEB/Chemical Treatment Calculations

System Description	Value
STA or FEB?	FEB
Type of chemical or polishing system	Direct Filtration
Overall treatment goal, mg/L P	0.01
EAA data	
Average flow, mgd	189
Influent P concentration, mg/L	0.150
Lake Okeechobee Data	
Average flow, mgd	1
Influent P concentration, mg/L	0.090
Rainfall and Evapotranspiration	
Average rainfall on STA or FEB, mgd	3
Average evapotranspiration from STA or FEB,mgd	4
STA/FEB Data	
Influent flow, mgd	190
Influent P concentration, mg/L	0.150
Settling rate, m/day	10.2
Area, acres	1000
Delta depth, ft	8.0
Volume, mgal	2607
Effluent P, mg/L	0.150
Wet period fraction	1.00
Chemical System Data	
Capacity, mgd	965
Average flow treated, mgd	188
Effluent P, mg/L	0.009
Percent of days in operation	70
Combined Effluent Data	
Effluent P, mg/L	0.0100
P inventory at end of period	
% in STA or FEB sediments	0.8
% in STA or FEB water column	0.0
% removed by chemical treatment	92.6
% in in system effluent	6.6
Sum of %	100.0

Table 1. Summary of STA/FEB/Chemical Treatment Calculations

System Description	Value
STA or FEB?	FEB
Type of chemical or polishing system	Direct Filtration
Overall treatment goal, mg/L P	0.03
EAA data	
Average flow, mgd	189
Influent P concentration, mg/L	0.150
Lake Okeechobee Data	
Average flow, mgd	3
Influent P concentration, mg/L	0.090
Rainfall and Evapotranspiration	
Average rainfall on STA or FEB, mgd	13
Average evapotranspiration from STA or FEB,mgd	16
STA/FEB Data	
Influent flow, mgd	192
Influent P concentration, mg/L	0.149
Settling rate, m/day	10.2
Area, acres	4000
Delta depth, ft	8.0
Volume, mgal	10427
Effluent P, mg/L	0.149
Wet period fraction	1.00
Chemical System Data	
Capacity, mgd	235
Average flow treated, mgd	160
Effluent P, mg/L	0.009
Percent of days in operation	78
Combined Effluent Data	
Effluent P, mg/L	0.0300
P inventory at end of period	
% in STA or FEB sediments	3.0
% in STA or FEB water column	0.6
% removed by chemical treatment	77.0
% in in system effluent	19.4
Sum of %	100.0

Tabulation of calculations

Treatment train _____ C:\EVERGL\DATASH

Influent P, ppb	Particulate P in influent, %	Particulate P removed in FEB, %	Treatment goal, ppb P	Treatment plant effluent P, ppb	FEB, acres	Plant capacity, mgd	Average plant flow, mgd	Present worth, $ million
	33	30						
	all the way	all the way						
150	30	0	30	9.0	500	476	161	270.45
					1000	386	161	266.49
					1500	344	161	269.15
					2000	312	161	273.19
					4000	235	160	295.76
150	30	0	10	9.0	1000	965	188	362.40
					2000	805	189	357.78
					3000	660	189	354.62
					4000	580	190	361.03
90	30	0	30	9.0	300	353	140	237.76
					500	313	140	235.63
					1000	259	140	236.65
					2000	208	~~139~~ 140	246.54
					3000	182	139	259.27
					4000	167	138	273.51
90	30	0	10	9.0	500	1010	187	359.55
					1000	900	187	352.82
					2000	730	188	346.81
					3000	628	188	349.6
					4000	545	189	355.6

Sensitivity Analysis

Tabulation of calculations

Treatment train Direct Filtration

C:\EVERGL\DATASH

Influent P, ppb	Particulate P in influent, %	Particulate P removed in FEB, %	Treatment goal, ppb P	Treatment plant effluent P, ppb	FEB, acres	Plant capacity, mgd	Average plant flow, mgd	Present worth, $ million
		0 ~~30~~						
	all the way	all the way						
					~~300~~			
150	30	0	30	9.0	500	476	161	268.3
					1000	386	161	264.34
					1500	344	161	267.0
					2000	312	161	271.04
					4000	235	160	295.75
150	30	0	10	9.0	1000	965	188	360.25
					2000	805	189	355.63
					3000	660	189	352.47
					4000	580	190	358.88
90	30	0	30	9.0	300	353	140	237.76
					500	313	140	235.62
					1000	259	140	236.65
					2000	208	140	246.54
					3000	182	139	257.12
					4000	167	138	271.36
90	30	0	10	9.0	500	1010	187	357.40
					1000	900	187	350.67
					2000	730	188	354.24
					3000	628	188	347.46
					4000	545	189	353.45

Sensitivity Analysis

Tabulation of calculations

Treatment train Direct Filtration C:\EVERGL\DATASH

Influent P, ppb	Particulate P in influent, %	Particulate P removed in FEB, %	Treatment goal, ppb P	Treatment plant effluent P, ppb	FEB, acres	Plant capacity, mgd	Average plant flow, mgd	Present worth, $ million	
		0 30							
	all the way	all the way							
150	30	0	30	9.0	500	476	161	268.3	270.45
					1000	386	161	264.34	266.49
					1500	344	161	267.0	269.15
					2000	312	161	271.04	273.19
					4000	235	160	295.75	295.76
150	30	0	10	9.0	1000	965	188	360.25	362.40
					2000	805	189	355.63	357.78
					3000	660	189	352.47	354.6
					4000	580	190	358.88	03
90	30	0	30	9.0	300	353	140	237.76	
					500	313	140	235.62	235.63
					1000	259	140	236.65	
					2000	208	140	246.54	
					3000	182	139	257.12	259.27
					4000	167	138	271.36	273.51
90	30	0	10	9.0	500	1010	187	357.40	359.55
					1000	900	187	350.67	352.82
					2000	730	188	354.24	346.81
					3000	628	188	347.46	349.6
					4000	545	189	353.45	355.6

Table 1. Summary of STA/FEB/Chemical Treatment Calculations

System Description	Value
STA or FEB?	FEB
Type of chemical or polishing system	Direct Filtration
Overall treatment goal, mg/L P	0.03
EAA data	
Average flow, mgd	189
Influent P concentration, mg/L	0.150
Lake Okeechobee Data	
Average flow, mgd	1
Influent P concentration, mg/L	0.090
Rainfall and Evapotranspiration	
Average rainfall on STA or FEB, mgd	2
Average evapotranspiration from STA or FEB,mgd	2
STA/FEB Data	
Influent flow, mgd	190
Influent P concentration, mg/L	0.150
Settling rate, m/day	10.2
Area, acres	500
Delta depth, ft	8.0
Volume, mgal	1303
Effluent P, mg/L	0.150
Wet period fraction	1.00
Chemical System Data	
Capacity, mgd	476
Average flow treated, mgd	161
Effluent P, mg/L	0.009
Percent of days in operation	73
Combined Effluent Data	
Effluent P, mg/L	0.0300
P inventory at end of period	
% in STA or FEB sediments	0.4
% in STA or FEB water column	0.0
% removed by chemical treatment	79.7
% in in system effluent	19.9
Sum of %	100.0

Table 1. Summary of STA/FEB/Chemical Treatment Calculations

System Description	Value
STA or FEB?	FEB
Type of chemical or polishing system	Direct Filtration
Overall treatment goal, mg/L P	0.03
EAA data	
Average flow, mgd	189
Influent P concentration, mg/L	0.150
Lake Okeechobee Data	
Average flow, mgd	2
Influent P concentration, mg/L	0.090
Rainfall and Evapotranspiration	
Average rainfall on STA or FEB, mgd	5
Average evapotranspiration from STA or FEB,mgd	6
STA/FEB Data	
Influent flow, mgd	191
Influent P concentration, mg/L	0.150
Settling rate, m/day	10.2
Area, acres	1500
Delta depth, ft	8.0
Volume, mgal	3910
Effluent P, mg/L	0.150
Wet period fraction	1.00
Chemical System Data	
Capacity, mgd	344
Average flow treated, mgd	161
Effluent P, mg/L	0.009
Percent of days in operation	72
Combined Effluent Data	
Effluent P, mg/L	0.0300
P inventory at end of period	
% in STA or FEB sediments	1.1
% in STA or FEB water column	0.0
% removed by chemical treatment	79.0
% in in system effluent	19.8
Sum of %	100.0

Table 1. Summary of STA/FEB/Chemical Treatment Calculations

System Description	Value
STA or FEB?	FEB
Type of chemical or polishing system	Direct Filtration
Overall treatment goal, mg/L P	0.03
EAA data	
Average flow, mgd	189
Influent P concentration, mg/L	0.150
Lake Okeechobee Data	
Average flow, mgd	1
Influent P concentration, mg/L	0.090
Rainfall and Evapotranspiration	
Average rainfall on STA or FEB, mgd	3
Average evapotranspiration from STA or FEB,mgd	4
STA/FEB Data	
Influent flow, mgd	190
Influent P concentration, mg/L	0.150
Settling rate, m/day	10.2
Area, acres	1000
Delta depth, ft	8.0
Volume, mgal	2607
Effluent P, mg/L	0.150
Wet period fraction	1.00
Chemical System Data	
Capacity, mgd	386
Average flow treated, mgd	161
Effluent P, mg/L	0.009
Percent of days in operation	72
Combined Effluent Data	
Effluent P, mg/L	0.0300
P inventory at end of period	
% in STA or FEB sediments	0.8
% in STA or FEB water column	0.0
% removed by chemical treatment	79.4
% in in system effluent	19.9
Sum of %	100.0

Table 1. Summary of STA/FEB/Chemical Treatment Calculations

System Description	Value
STA or FEB?	FEB
Type of chemical or polishing system	Direct Filtration
Overall treatment goal, mg/L P	0.01
EAA data	
Average flow, mgd	189
Influent P concentration, mg/L	0.150
Lake Okeechobee Data	
Average flow, mgd	2
Influent P concentration, mg/L	0.090
Rainfall and Evapotranspiration	
Average rainfall on STA or FEB, mgd	7
Average evapotranspiration from STA or FEB,mgd	8
STA/FEB Data	
Influent flow, mgd	191
Influent P concentration, mg/L	0.149
Settling rate, m/day	10.2
Area, acres	2000
Delta depth, ft	8.0
Volume, mgal	5213
Effluent P, mg/L	0.149
Wet period fraction	1.00
Chemical System Data	
Capacity, mgd	805
Average flow treated, mgd	189
Effluent P, mg/L	0.009
Percent of days in operation	69
Combined Effluent Data	
Effluent P, mg/L	0.0100
P inventory at end of period	
% in STA or FEB sediments	1.5
% in STA or FEB water column	0.0
% removed by chemical treatment	91.9
% in in system effluent	6.6
Sum of %	100.0

Table 1. Summary of STA/FEB/Chemical Treatment Calculations

System Description	Value
STA or FEB?	FEB
Type of chemical or polishing system	Direct Filtration
Overall treatment goal, mg/L P	0.03
EAA data	
Average flow, mgd	189
Influent P concentration, mg/L	0.150
Lake Okeechobee Data	
Average flow, mgd	2
Influent P concentration, mg/L	0.090
Rainfall and Evapotranspiration	
Average rainfall on STA or FEB, mgd	7
Average evapotranspiration from STA or FEB,mgd	8
STA/FEB Data	
Influent flow, mgd	191
Influent P concentration, mg/L	0.149
Settling rate, m/day	10.2
Area, acres	2000
Delta depth, ft	8.0
Volume, mgal	5213
Effluent P, mg/L	0.149
Wet period fraction	1.00
Chemical System Data	
Capacity, mgd	312
Average flow treated, mgd	161
Effluent P, mg/L	0.009
Percent of days in operation	74
Combined Effluent Data	
Effluent P, mg/L	0.0300
P inventory at end of period	
% in STA or FEB sediments	1.5
% in STA or FEB water column	0.0
% removed by chemical treatment	78.7
% in in system effluent	19.8
Sum of %	100.0

Table 1. Summary of STA/FEB/Chemical Treatment Calculations

System Description	Value
STA or FEB?	FEB
Type of chemical or polishing system	Direct Filtration
Overall treatment goal, mg/L P	0.01
EAA data	
Average flow, mgd	189
Influent P concentration, mg/L	0.150
Lake Okeechobee Data	
Average flow, mgd	5
Influent P concentration, mg/L	0.090
Rainfall and Evapotranspiration	
Average rainfall on STA or FEB, mgd	13
Average evapotranspiration from STA or FEB,mgd	16
STA/FEB Data	
Influent flow, mgd	194
Influent P concentration, mg/L	0.149
Settling rate, m/day	10.2
Area, acres	4000
Delta depth, ft	8.0
Volume, mgal	10427
Effluent P, mg/L	0.149
Wet period fraction	1.00
Chemical System Data	
Capacity, mgd	580
Average flow treated, mgd	190
Effluent P, mg/L	0.009
Percent of days in operation	66
Combined Effluent Data	
Effluent P, mg/L	0.0100
P inventory at end of period	
% in STA or FEB sediments	3.0
% in STA or FEB water column	0.0
% removed by chemical treatment	90.5
% in in system effluent	6.5
Sum of %	100.0

Table 1. Summary of STA/FEB/Chemical Treatment Calculations

System Description	Value
STA or FEB?	FEB
Type of chemical or polishing system	Direct Filtration
Overall treatment goal, mg/L P	0.01
EAA data	
Average flow, mgd	189
Influent P concentration, mg/L	0.150
Lake Okeechobee Data	
Average flow, mgd	4
Influent P concentration, mg/L	0.090
Rainfall and Evapotranspiration	
Average rainfall on STA or FEB, mgd	10
Average evapotranspiration from STA or FEB,mgd	12
STA/FEB Data	
Influent flow, mgd	193
Influent P concentration, mg/L	0.149
Settling rate, m/day	10.2
Area, acres	3000
Delta depth, ft	8.0
Volume, mgal	7820
Effluent P, mg/L	0.149
Wet period fraction	1.00
Chemical System Data	
Capacity, mgd	660
Average flow treated, mgd	189
Effluent P, mg/L	0.009
Percent of days in operation	66
Combined Effluent Data	
Effluent P, mg/L	0.0100
P inventory at end of period	
% in STA or FEB sediments	2.2
% in STA or FEB water column	0.0
% removed by chemical treatment	91.2
% in in system effluent	6.6
Sum of %	100.0

Table 1. Summary of STA/FEB/Chemical Treatment Calculations

System Description	Value
STA or FEB?	FEB
Type of chemical or polishing system	Direct Filtration
Overall treatment goal, mg/L P	0.01
EAA data	
Average flow, mgd	189
Influent P concentration, mg/L	0.090
Lake Okeechobee Data	
Average flow, mgd	0
Influent P concentration, mg/L	0.090
Rainfall and Evapotranspiration	
Average rainfall on STA or FEB, mgd	1
Average evapotranspiration from STA or FEB,mgd	1
STA/FEB Data	
Influent flow, mgd	189
Influent P concentration, mg/L	0.090
Settling rate, m/day	10.2
Area, acres	300
Delta depth, ft	8.0
Volume, mgal	782
Effluent P, mg/L	0.081
Wet period fraction	1.00
Chemical System Data	
Capacity, mgd	353
Average flow treated, mgd	140
Effluent P, mg/L	0.009
Percent of days in operation	73
Combined Effluent Data	
Effluent P, mg/L	0.0277
P inventory at end of period	
% in STA or FEB sediments	10.2
% in STA or FEB water column	0.0
% removed by chemical treatment	59.2
% in in system effluent	30.7
Sum of %	100.0

Table 1. Summary of STA/FEB/Chemical Treatment Calculations

System Description	Value
STA or FEB?	FEB
Type of chemical or polishing system	Direct Filtration
Overall treatment goal, mg/L P	0.03
EAA data	
Average flow, mgd	189
Influent P concentration, mg/L	0.090
Lake Okeechobee Data	
Average flow, mgd	1
Influent P concentration, mg/L	0.090
Rainfall and Evapotranspiration	
Average rainfall on STA or FEB, mgd	2
Average evapotranspiration from STA or FEB,mgd	2
STA/FEB Data	
Influent flow, mgd	190
Influent P concentration, mg/L	0.090
Settling rate, m/day	10.2
Area, acres	500
Delta depth, ft	8.0
Volume, mgal	1303
Effluent P, mg/L	0.090
Wet period fraction	1.00
Chemical System Data	
Capacity, mgd	313
Average flow treated, mgd	140
Effluent P, mg/L	0.009
Percent of days in operation	74
Combined Effluent Data	
Effluent P, mg/L	0.0300
P inventory at end of period	
% in STA or FEB sediments	0.5
% in STA or FEB water column	0.0
% removed by chemical treatment	66.4
% in in system effluent	33.1
Sum of %	100.0

Table 1. Summary of STA/FEB/Chemical Treatment Calculations

System Description	Value
STA or FEB?	FEB
Type of chemical or polishing system	Direct Filtration
Overall treatment goal, mg/L P	0.03
EAA data	
Average flow, mgd	189
Influent P concentration, mg/L	0.090
Lake Okeechobee Data	
Average flow, mgd	1
Influent P concentration, mg/L	0.090
Rainfall and Evapotranspiration	
Average rainfall on STA or FEB, mgd	3
Average evapotranspiration from STA or FEB,mgd	4
STA/FEB Data	
Influent flow, mgd	190
Influent P concentration, mg/L	0.090
Settling rate, m/day	10.2
Area, acres	1000
Delta depth, ft	8.0
Volume, mgal	2607
Effluent P, mg/L	0.090
Wet period fraction	1.00
Chemical System Data	
Capacity, mgd	259
Average flow treated, mgd	140
Effluent P, mg/L	0.009
Percent of days in operation	74
Combined Effluent Data	
Effluent P, mg/L	0.0300
P inventory at end of period	
% in STA or FEB sediments	1.0
% in STA or FEB water column	0.0
% removed by chemical treatment	65.9
% in in system effluent	33.0
Sum of %	100.0

Table 1. Summary of STA/FEB/Chemical Treatment Calculations

System Description	Value
STA or FEB?	FEB
Type of chemical or polishing system	Direct Filtration
Overall treatment goal, mg/L P	0.03
EAA data	
Average flow, mgd	189
Influent P concentration, mg/L	0.090
Lake Okeechobee Data	
Average flow, mgd	2
Influent P concentration, mg/L	0.090
Rainfall and Evapotranspiration	
Average rainfall on STA or FEB, mgd	7
Average evapotranspiration from STA or FEB,mgd	8
STA/FEB Data	
Influent flow, mgd	191
Influent P concentration, mg/L	0.090
Settling rate, m/day	10.2
Area, acres	2000
Delta depth, ft	8.0
Volume, mgal	5213
Effluent P, mg/L	0.090
Wet period fraction	1.00
Chemical System Data	
Capacity, mgd	208
Average flow treated, mgd	140
Effluent P, mg/L	0.009
Percent of days in operation	79
Combined Effluent Data	
Effluent P, mg/L	0.0300
P inventory at end of period	
% in STA or FEB sediments	2.1
% in STA or FEB water column	0.0
% removed by chemical treatment	65.2
% in in system effluent	32.7
Sum of %	100.0

Table 1. Summary of STA/FEB/Chemical Treatment Calculations

System Description	Value
STA or FEB?	FEB
Type of chemical or polishing system	Direct Filtration
Overall treatment goal, mg/L P	0.03
EAA data	
Average flow, mgd	189
Influent P concentration, mg/L	0.090
Lake Okeechobee Data	
Average flow, mgd	2
Influent P concentration, mg/L	0.090
Rainfall and Evapotranspiration	
Average rainfall on STA or FEB, mgd	10
Average evapotranspiration from STA or FEB,mgd	12
STA/FEB Data	
Influent flow, mgd	191
Influent P concentration, mg/L	0.090
Settling rate, m/day	10.2
Area, acres	3000
Delta depth, ft	8.0
Volume, mgal	7820
Effluent P, mg/L	0.090
Wet period fraction	1.00
Chemical System Data	
Capacity, mgd	182
Average flow treated, mgd	139
Effluent P, mg/L	0.009
Percent of days in operation	83
Combined Effluent Data	
Effluent P, mg/L	0.0300
P inventory at end of period	
% in STA or FEB sediments	3.1
% in STA or FEB water column	0.5
% removed by chemical treatment	64.3
% in in system effluent	32.1
Sum of %	100.0

Table 1. Summary of STA/FEB/Chemical Treatment Calculations

System Description	Value
STA or FEB?	FEB
Type of chemical or polishing system	Direct Filtration
Overall treatment goal, mg/L P	0.03
EAA data	
Average flow, mgd	189
Influent P concentration, mg/L	0.090
Lake Okeechobee Data	
Average flow, mgd	2
Influent P concentration, mg/L	0.090
Rainfall and Evapotranspiration	
Average rainfall on STA or FEB, mgd	13
Average evapotranspiration from STA or FEB,mgd	16
STA/FEB Data	
Influent flow, mgd	191
Influent P concentration, mg/L	0.090
Settling rate, m/day	10.2
Area, acres	4000
Delta depth, ft	8.0
Volume, mgal	10427
Effluent P, mg/L	0.090
Wet period fraction	1.00
Chemical System Data	
Capacity, mgd	167
Average flow treated, mgd	138
Effluent P, mg/L	0.009
Percent of days in operation	87
Combined Effluent Data	
Effluent P, mg/L	0.0300
P inventory at end of period	
% in STA or FEB sediments	4.1
% in STA or FEB water column	0.9
% removed by chemical treatment	63.4
% in in system effluent	31.7
Sum of %	100.0

Table 1. Summary of STA/FEB/Chemical Treatment Calculations

System Description	Value
STA or FEB?	FEB
Type of chemical or polishing system	Direct Filtration
Overall treatment goal, mg/L P	0.01
EAA data	
Average flow, mgd	189
Influent P concentration, mg/L	0.090
Lake Okeechobee Data	
Average flow, mgd	1
Influent P concentration, mg/L	0.090
Rainfall and Evapotranspiration	
Average rainfall on STA or FEB, mgd	2
Average evapotranspiration from STA or FEB,mgd	2
STA/FEB Data	
Influent flow, mgd	190
Influent P concentration, mg/L	0.090
Settling rate, m/day	10.2
Area, acres	500
Delta depth, ft	8.0
Volume, mgal	1303
Effluent P, mg/L	0.090
Wet period fraction	1.00
Chemical System Data	
Capacity, mgd	1010
Average flow treated, mgd	187
Effluent P, mg/L	0.009
Percent of days in operation	72
Combined Effluent Data	
Effluent P, mg/L	0.0100
P inventory at end of period	
% in STA or FEB sediments	0.5
% in STA or FEB water column	0.0
% removed by chemical treatment	88.4
% in in system effluent	11.1
Sum of %	100.0

Table 1. Summary of STA/FEB/Chemical Treatment Calculations

System Description	Value
STA or FEB?	FEB
Type of chemical or polishing system	Direct Filtration
Overall treatment goal, mg/L P	0.01
EAA data	
Average flow, mgd	189
Influent P concentration, mg/L	0.090
Lake Okeechobee Data	
Average flow, mgd	1
Influent P concentration, mg/L	0.090
Rainfall and Evapotranspiration	
Average rainfall on STA or FEB, mgd	3
Average evapotranspiration from STA or FEB,mgd	4
STA/FEB Data	
Influent flow, mgd	190
Influent P concentration, mg/L	0.090
Settling rate, m/day	10.2
Area, acres	1000
Delta depth, ft	8.0
Volume, mgal	2607
Effluent P, mg/L	0.090
Wet period fraction	1.00
Chemical System Data	
Capacity, mgd	900
Average flow treated, mgd	187
Effluent P, mg/L	0.009
Percent of days in operation	70
Combined Effluent Data	
Effluent P, mg/L	0.0100
P inventory at end of period	
% in STA or FEB sediments	1.0
% in STA or FEB water column	0.0
% removed by chemical treatment	87.9
% in in system effluent	11.0
Sum of %	100.0

Table 1. Summary of STA/FEB/Chemical Treatment Calculations

System Description	Value
STA or FEB?	FEB
Type of chemical or polishing system	Direct Filtration
Overall treatment goal, mg/L P	0.01
EAA data	
Average flow, mgd	189
Influent P concentration, mg/L	0.090
Lake Okeechobee Data	
Average flow, mgd	2
Influent P concentration, mg/L	0.090
Rainfall and Evapotranspiration	
Average rainfall on STA or FEB, mgd	7
Average evapotranspiration from STA or FEB,mgd	8
STA/FEB Data	
Influent flow, mgd	191
Influent P concentration, mg/L	0.090
Settling rate, m/day	10.2
Area, acres	2000
Delta depth, ft	8.0
Volume, mgal	5213
Effluent P, mg/L	0.090
Wet period fraction	1.00
Chemical System Data	
Capacity, mgd	730
Average flow treated, mgd	188
Effluent P, mg/L	0.009
Percent of days in operation	69
Combined Effluent Data	
Effluent P, mg/L	0.0100
P inventory at end of period	
% in STA or FEB sediments	2.1
% in STA or FEB water column	0.0
% removed by chemical treatment	87.1
% in in system effluent	10.9
Sum of %	100.0

Table 1. Summary of STA/FEB/Chemical Treatment Calculations

System Description	Value
STA or FEB?	FEB
Type of chemical or polishing system	Direct Filtration
Overall treatment goal, mg/L P	0.01
EAA data	
Average flow, mgd	189
Influent P concentration, mg/L	0.090
Lake Okeechobee Data	
Average flow, mgd	4
Influent P concentration, mg/L	0.090
Rainfall and Evapotranspiration	
Average rainfall on STA or FEB, mgd	10
Average evapotranspiration from STA or FEB,mgd	12
STA/FEB Data	
Influent flow, mgd	193
Influent P concentration, mg/L	0.090
Settling rate, m/day	10.2
Area, acres	3000
Delta depth, ft	8.0
Volume, mgal	7820
Effluent P, mg/L	0.081
Wet period fraction	1.00
Chemical System Data	
Capacity, mgd	628
Average flow treated, mgd	188
Effluent P, mg/L	0.009
Percent of days in operation	67
Combined Effluent Data	
Effluent P, mg/L	0.0099
P inventory at end of period	
% in STA or FEB sediments	12.6
% in STA or FEB water column	0.0
% removed by chemical treatment	76.7
% in in system effluent	10.6
Sum of %	100.0

Table 1. Summary of STA/FEB/Chemical Treatment Calculations

System Description	Value
STA or FEB?	FEB
Type of chemical or polishing system	Direct Filtration
Overall treatment goal, mg/L P	0.03
EAA data	
Average flow, mgd	189
Influent P concentration, mg/L	0.150
Lake Okeechobee Data	
Average flow, mgd	1
Influent P concentration, mg/L	0.090
Rainfall and Evapotranspiration	
Average rainfall on STA or FEB, mgd	2
Average evapotranspiration from STA or FEB,mgd	2
STA/FEB Data	
Influent flow, mgd	190
Influent P concentration, mg/L	0.150
Settling rate, m/day	10.2
Area, acres	500
Delta depth, ft	8.0
Volume, mgal	1303
Effluent P, mg/L	0.135
Wet period fraction	1.00
Chemical System Data	
Capacity, mgd	442
Average flow treated, mgd	158
Effluent P, mg/L	0.009
Percent of days in operation	73
Combined Effluent Data	
Effluent P, mg/L	0.0300
P inventory at end of period	
% in STA or FEB sediments	10.2
% in STA or FEB water column	0.0
% removed by chemical treatment	69.8
% in in system effluent	19.9
Sum of %	100.0

Sensitivity Analysis

Tabulation of calculations

Treatment train Direct Filtration C:\EVERGL\DATASH

Influent P, ppb	Particulate P in influent, %	Particulate P removed in FEB, %	Treatment goal, ppb P	Treatment plant effluent P, ppb	FEB, acres	Plant capacity, mgd	Average plant flow, mgd	Present worth, $ million
		30						
	all the way	all the way						
150	30	33	30	9.0	500	442	158	263.99
					1000	360	158	261.14
					2000	290	158	268.39
					4000	218	157	291.66
150	30	33	10	9.0	500	1075	188	369.13
					1000	950	188	360.32
					2000	790	189	355.70
					2500	710	189	353.08
					4000	575	190	360.33
90	30	33	30	9.0	300	315	134	229.00
					500	281	134	227.70
					1000	234	134	229.69
					2000	189	134	240.40
					2500	176	134	247.06
					4000	154.5	132	268.28
					5000	148	131	283.69
90	30	33	10	9.0	500	990	187	356.78
					1000	880	187	350.05
					2000	720	188	345.42
					2500	660	188	345.58
					4000	535	189	354.21
150	30	33	10	9.0	2200	756	189	354.38
					3000	655	189	353.92
					2750	680	189	353.16

Table 1. Summary of STA/FEB/Chemical Treatment Calculations

System Description	Value
STA or FEB?	FEB
Type of chemical or polishing system	Direct Filtration
Overall treatment goal, mg/L P	0.03
EAA data	
Average flow, mgd	189
Influent P concentration, mg/L	0.150
Lake Okeechobee Data	
Average flow, mgd	1
Influent P concentration, mg/L	0.090
Rainfall and Evapotranspiration	
Average rainfall on STA or FEB, mgd	2
Average evapotranspiration from STA or FEB,mgd	2
STA/FEB Data	
Influent flow, mgd	190
Influent P concentration, mg/L	0.150
Settling rate, m/day	10.2
Area, acres	500
Delta depth, ft	8.0
Volume, mgal	1303
Effluent P, mg/L	0.135
Wet period fraction	1.00
Chemical System Data	
Capacity, mgd	1075
Average flow treated, mgd	188
Effluent P, mg/L	0.009
Percent of days in operation	72
Combined Effluent Data	
Effluent P, mg/L	0.0100
P inventory at end of period	
% in STA or FEB sediments	10.2
% in STA or FEB water column	0.0
% removed by chemical treatment	83.1
% in in system effluent	6.6
Sum of %	100.0

Table 1. Summary of STA/FEB/Chemical Treatment Calculations

System Description	Value
STA or FEB?	FEB
Type of chemical or polishing system	Direct Filtration
Overall treatment goal, mg/L P	0.03
EAA data	
Average flow, mgd	189
Influent P concentration, mg/L	0.150
Lake Okeechobee Data	
Average flow, mgd	1
Influent P concentration, mg/L	0.090
Rainfall and Evapotranspiration	
Average rainfall on STA or FEB, mgd	3
Average evapotranspiration from STA or FEB,mgd	4
STA/FEB Data	
Influent flow, mgd	190
Influent P concentration, mg/L	0.150
Settling rate, m/day	10.2
Area, acres	1000
Delta depth, ft	8.0
Volume, mgal	2607
Effluent P, mg/L	0.135
Wet period fraction	1.00
Chemical System Data	
Capacity, mgd	950
Average flow treated, mgd	188
Effluent P, mg/L	0.009
Percent of days in operation	70
Combined Effluent Data	
Effluent P, mg/L	0.0100
P inventory at end of period	
% in STA or FEB sediments	10.6
% in STA or FEB water column	0.0
% removed by chemical treatment	82.8
% in in system effluent	6.7
Sum of %	100.0

Table 1. Summary of STA/FEB/Chemical Treatment Calculations

System Description	Value
STA or FEB?	FEB
Type of chemical or polishing system	Direct Filtration
Overall treatment goal, mg/L P	0.03
EAA data	
Average flow, mgd	189
Influent P concentration, mg/L	0.150
Lake Okeechobee Data	
Average flow, mgd	2
Influent P concentration, mg/L	0.090
Rainfall and Evapotranspiration	
Average rainfall on STA or FEB, mgd	7
Average evapotranspiration from STA or FEB,mgd	8
STA/FEB Data	
Influent flow, mgd	191
Influent P concentration, mg/L	0.149
Settling rate, m/day	10.2
Area, acres	2000
Delta depth, ft	8.0
Volume, mgal	5213
Effluent P, mg/L	0.135
Wet period fraction	1.00
Chemical System Data	
Capacity, mgd	790
Average flow treated, mgd	189
Effluent P, mg/L	0.009
Percent of days in operation	69
Combined Effluent Data	
Effluent P, mg/L	0.0100
P inventory at end of period	
% in STA or FEB sediments	11.3
% in STA or FEB water column	0.0
% removed by chemical treatment	82.2
% in in system effluent	6.6
Sum of %	100.0

Table 1. Summary of STA/FEB/Chemical Treatment Calculations

System Description	Value
STA or FEB?	FEB
Type of chemical or polishing system	Direct Filtration
Overall treatment goal, mg/L P	0.03
EAA data	
Average flow, mgd	189
Influent P concentration, mg/L	0.150
Lake Okeechobee Data	
Average flow, mgd	3
Influent P concentration, mg/L	0.090
Rainfall and Evapotranspiration	
Average rainfall on STA or FEB, mgd	8
Average evapotranspiration from STA or FEB,mgd	10
STA/FEB Data	
Influent flow, mgd	192
Influent P concentration, mg/L	0.149
Settling rate, m/day	10.2
Area, acres	2500
Delta depth, ft	8.0
Volume, mgal	6517
Effluent P, mg/L	0.134
Wet period fraction	1.00
Chemical System Data	
Capacity, mgd	710
Average flow treated, mgd	189
Effluent P, mg/L	0.009
Percent of days in operation	68
Combined Effluent Data	
Effluent P, mg/L	0.0100
P inventory at end of period	
% in STA or FEB sediments	11.6
% in STA or FEB water column	0.0
% removed by chemical treatment	81.8
% in in system effluent	6.6
Sum of %	100.0

Table 1. Summary of STA/FEB/Chemical Treatment Calculations

System Description	Value
STA or FEB?	FEB
Type of chemical or polishing system	Direct Filtration
Overall treatment goal, mg/L P	0.03
EAA data	
Average flow, mgd	189
Influent P concentration, mg/L	0.150
Lake Okeechobee Data	
Average flow, mgd	5
Influent P concentration, mg/L	0.090
Rainfall and Evapotranspiration	
Average rainfall on STA or FEB, mgd	13
Average evapotranspiration from STA or FEB,mgd	16
STA/FEB Data	
Influent flow, mgd	194
Influent P concentration, mg/L	0.149
Settling rate, m/day	10.2
Area, acres	4000
Delta depth, ft	8.0
Volume, mgal	10427
Effluent P, mg/L	0.134
Wet period fraction	1.00
Chemical System Data	
Capacity, mgd	575
Average flow treated, mgd	190
Effluent P, mg/L	0.009
Percent of days in operation	66
Combined Effluent Data	
Effluent P, mg/L	0.0100
P inventory at end of period	
% in STA or FEB sediments	12.6
% in STA or FEB water column	0.0
% removed by chemical treatment	80.9
% in in system effluent	6.5
Sum of %	100.0

Table 1. Summary of STA/FEB/Chemical Treatment Calculations

System Description	Value
STA or FEB?	FEB
Type of chemical or polishing system	Direct Filtration
Overall treatment goal, mg/L P	0.03
EAA data	
Average flow, mgd	189
Influent P concentration, mg/L	0.090
Lake Okeechobee Data	
Average flow, mgd	0
Influent P concentration, mg/L	0.090
Rainfall and Evapotranspiration	
Average rainfall on STA or FEB, mgd	1
Average evapotranspiration from STA or FEB,mgd	1
STA/FEB Data	
Influent flow, mgd	189
Influent P concentration, mg/L	0.090
Settling rate, m/day	10.2
Area, acres	300
Delta depth, ft	8.0
Volume, mgal	782
Effluent P, mg/L	0.081
Wet period fraction	1.00
Chemical System Data	
Capacity, mgd	315
Average flow treated, mgd	134
Effluent P, mg/L	0.009
Percent of days in operation	74
Combined Effluent Data	
Effluent P, mg/L	0.0300
P inventory at end of period	
% in STA or FEB sediments	10.2
% in STA or FEB water column	0.0
% removed by chemical treatment	56.6
% in in system effluent	33.2
Sum of %	100.0

Table 1. Summary of STA/FEB/Chemical Treatment Calculations

System Description	Value
STA or FEB?	FEB
Type of chemical or polishing system	Direct Filtration
Overall treatment goal, mg/L P	0.03
EAA data	
Average flow, mgd	189
Influent P concentration, mg/L	0.090
Lake Okeechobee Data	
Average flow, mgd	1
Influent P concentration, mg/L	0.090
Rainfall and Evapotranspiration	
Average rainfall on STA or FEB, mgd	2
Average evapotranspiration from STA or FEB,mgd	2
STA/FEB Data	
Influent flow, mgd	190
Influent P concentration, mg/L	0.090
Settling rate, m/day	10.2
Area, acres	500
Delta depth, ft	8.0
Volume, mgal	1303
Effluent P, mg/L	0.081
Wet period fraction	1.00
Chemical System Data	
Capacity, mgd	281
Average flow treated, mgd	134
Effluent P, mg/L	0.009
Percent of days in operation	74
Combined Effluent Data	
Effluent P, mg/L	0.0300
P inventory at end of period	
% in STA or FEB sediments	10.4
% in STA or FEB water column	0.0
% removed by chemical treatment	56.5
% in in system effluent	33.1
Sum of %	100.0

Table 1. Summary of STA/FEB/Chemical Treatment Calculations

System Description	Value
STA or FEB?	FEB
Type of chemical or polishing system	Direct Filtration
Overall treatment goal, mg/L P	0.03
EAA data	
Average flow, mgd	189
Influent P concentration, mg/L	0.090
Lake Okeechobee Data	
Average flow, mgd	1
Influent P concentration, mg/L	0.090
Rainfall and Evapotranspiration	
Average rainfall on STA or FEB, mgd	3
Average evapotranspiration from STA or FEB,mgd	4
STA/FEB Data	
Influent flow, mgd	190
Influent P concentration, mg/L	0.090
Settling rate, m/day	10.2
Area, acres	1000
Delta depth, ft	8.0
Volume, mgal	2607
Effluent P, mg/L	0.081
Wet period fraction	1.00
Chemical System Data	
Capacity, mgd	234
Average flow treated, mgd	134
Effluent P, mg/L	0.009
Percent of days in operation	75
Combined Effluent Data	
Effluent P, mg/L	0.0300
P inventory at end of period	
% in STA or FEB sediments	10.8
% in STA or FEB water column	0.0
% removed by chemical treatment	56.2
% in in system effluent	33.0
Sum of %	100.0

Table 1. Summary of STA/FEB/Chemical Treatment Calculations

System Description	Value
STA or FEB?	FEB
Type of chemical or polishing system	Direct Filtration
Overall treatment goal, mg/L P	0.03
EAA data	
Average flow, mgd	189
Influent P concentration, mg/L	0.090
Lake Okeechobee Data	
Average flow, mgd	1
Influent P concentration, mg/L	0.090
Rainfall and Evapotranspiration	
Average rainfall on STA or FEB, mgd	7
Average evapotranspiration from STA or FEB,mgd	8
STA/FEB Data	
Influent flow, mgd	191
Influent P concentration, mg/L	0.090
Settling rate, m/day	10.2
Area, acres	2000
Delta depth, ft	8.0
Volume, mgal	5213
Effluent P, mg/L	0.081
Wet period fraction	1.00
Chemical System Data	
Capacity, mgd	189
Average flow treated, mgd	134
Effluent P, mg/L	0.009
Percent of days in operation	81
Combined Effluent Data	
Effluent P, mg/L	0.0300
P inventory at end of period	
% in STA or FEB sediments	11.8
% in STA or FEB water column	0.1
% removed by chemical treatment	55.5
% in in system effluent	32.6
Sum of %	100.0

Table 1. Summary of STA/FEB/Chemical Treatment Calculations

System Description	Value
STA or FEB?	FEB
Type of chemical or polishing system	Direct Filtration
Overall treatment goal, mg/L P	0.03
EAA data	
Average flow, mgd	189
Influent P concentration, mg/L	0.090
Lake Okeechobee Data	
Average flow, mgd	2
Influent P concentration, mg/L	0.090
Rainfall and Evapotranspiration	
Average rainfall on STA or FEB, mgd	8
Average evapotranspiration from STA or FEB,mgd	10
STA/FEB Data	
Influent flow, mgd	191
Influent P concentration, mg/L	0.090
Settling rate, m/day	10.2
Area, acres	2500
Delta depth, ft	8.0
Volume, mgal	6517
Effluent P, mg/L	0.081
Wet period fraction	1.00
Chemical System Data	
Capacity, mgd	176
Average flow treated, mgd	134
Effluent P, mg/L	0.009
Percent of days in operation	83
Combined Effluent Data	
Effluent P, mg/L	0.0300
P inventory at end of period	
% in STA or FEB sediments	12.2
% in STA or FEB water column	0.3
% removed by chemical treatment	55.1
% in in system effluent	32.4
Sum of %	100.0

Table 1. Summary of STA/FEB/Chemical Treatment Calculations

System Description	Value
STA or FEB?	FEB
Type of chemical or polishing system	Direct Filtration
Overall treatment goal, mg/L P	0.03
EAA data	
Average flow, mgd	189
Influent P concentration, mg/L	0.090
Lake Okeechobee Data	
Average flow, mgd	2
Influent P concentration, mg/L	0.090
Rainfall and Evapotranspiration	
Average rainfall on STA or FEB, mgd	13
Average evapotranspiration from STA or FEB,mgd	16
STA/FEB Data	
Influent flow, mgd	191
Influent P concentration, mg/L	0.090
Settling rate, m/day	10.2
Area, acres	4000
Delta depth, ft	8.0
Volume, mgal	10427
Effluent P, mg/L	0.081
Wet period fraction	1.00
Chemical System Data	
Capacity, mgd	155
Average flow treated, mgd	132
Effluent P, mg/L	0.009
Percent of days in operation	89
Combined Effluent Data	
Effluent P, mg/L	0.0300
P inventory at end of period	
% in STA or FEB sediments	13.6
% in STA or FEB water column	0.8
% removed by chemical treatment	53.9
% in in system effluent	31.7
Sum of %	100.0

Table 1. Summary of STA/FEB/Chemical Treatment Calculations

System Description	Value
STA or FEB?	FEB
Type of chemical or polishing system	Direct Filtration
Overall treatment goal, mg/L P	0.03
EAA data	
Average flow, mgd	189
Influent P concentration, mg/L	0.090
Lake Okeechobee Data	
Average flow, mgd	2
Influent P concentration, mg/L	0.090
Rainfall and Evapotranspiration	
Average rainfall on STA or FEB, mgd	17
Average evapotranspiration from STA or FEB,mgd	20
STA/FEB Data	
Influent flow, mgd	191
Influent P concentration, mg/L	0.090
Settling rate, m/day	10.2
Area, acres	5000
Delta depth, ft	8.0
Volume, mgal	13033
Effluent P, mg/L	0.081
Wet period fraction	1.00
Chemical System Data	
Capacity, mgd	148
Average flow treated, mgd	131
Effluent P, mg/L	0.009
Percent of days in operation	91
Combined Effluent Data	
Effluent P, mg/L	0.0300
P inventory at end of period	
% in STA or FEB sediments	14.5
% in STA or FEB water column	1.2
% removed by chemical treatment	53.1
% in in system effluent	31.2
Sum of %	100.0

Table 1. Summary of STA/FEB/Chemical Treatment Calculations

System Description	Value
STA or FEB?	FEB
Type of chemical or polishing system	Direct Filtration
Overall treatment goal, mg/L P	0.01
EAA data	
Average flow, mgd	189
Influent P concentration, mg/L	0.090
Lake Okeechobee Data	
Average flow, mgd	1
Influent P concentration, mg/L	0.090
Rainfall and Evapotranspiration	
Average rainfall on STA or FEB, mgd	2
Average evapotranspiration from STA or FEB,mgd	2
STA/FEB Data	
Influent flow, mgd	190
Influent P concentration, mg/L	0.090
Settling rate, m/day	10.2
Area, acres	500
Delta depth, ft	8.0
Volume, mgal	1303
Effluent P, mg/L	0.081
Wet period fraction	1.00
Chemical System Data	
Capacity, mgd	990
Average flow treated, mgd	187
Effluent P, mg/L	0.009
Percent of days in operation	72
Combined Effluent Data	
Effluent P, mg/L	0.0100
P inventory at end of period	
% in STA or FEB sediments	10.4
% in STA or FEB water column	0.0
% removed by chemical treatment	78.5
% in in system effluent	11.1
Sum of %	100.0

Table 1. Summary of STA/FEB/Chemical Treatment Calculations

System Description	Value
STA or FEB?	FEB
Type of chemical or polishing system	Direct Filtration
Overall treatment goal, mg/L P	0.01
EAA data	
Average flow, mgd	189
Influent P concentration, mg/L	0.090
Lake Okeechobee Data	
Average flow, mgd	1
Influent P concentration, mg/L	0.090
Rainfall and Evapotranspiration	
Average rainfall on STA or FEB, mgd	3
Average evapotranspiration from STA or FEB,mgd	4
STA/FEB Data	
Influent flow, mgd	190
Influent P concentration, mg/L	0.090
Settling rate, m/day	10.2
Area, acres	1000
Delta depth, ft	8.0
Volume, mgal	2607
Effluent P, mg/L	0.081
Wet period fraction	1.00
Chemical System Data	
Capacity, mgd	880
Average flow treated, mgd	187
Effluent P, mg/L	0.009
Percent of days in operation	70
Combined Effluent Data	
Effluent P, mg/L	0.0100
P inventory at end of period	
% in STA or FEB sediments	10.8
% in STA or FEB water column	0.0
% removed by chemical treatment	78.1
% in in system effluent	11.0
Sum of %	100.0

Table 1. Summary of STA/FEB/Chemical Treatment Calculations

System Description	Value
STA or FEB?	FEB
Type of chemical or polishing system	Direct Filtration
Overall treatment goal, mg/L P	0.01
EAA data	
Average flow, mgd	189
Influent P concentration, mg/L	0.090
Lake Okeechobee Data	
Average flow, mgd	2
Influent P concentration, mg/L	0.090
Rainfall and Evapotranspiration	
Average rainfall on STA or FEB, mgd	7
Average evapotranspiration from STA or FEB,mgd	8
STA/FEB Data	
Influent flow, mgd	191
Influent P concentration, mg/L	0.090
Settling rate, m/day	10.2
Area, acres	2000
Delta depth, ft	8.0
Volume, mgal	5213
Effluent P, mg/L	0.081
Wet period fraction	1.00
Chemical System Data	
Capacity, mgd	720
Average flow treated, mgd	188
Effluent P, mg/L	0.009
Percent of days in operation	69
Combined Effluent Data	
Effluent P, mg/L	0.0100
P inventory at end of period	
% in STA or FEB sediments	11.8
% in STA or FEB water column	0.0
% removed by chemical treatment	77.4
% in in system effluent	10.8
Sum of %	100.0

Table 1. Summary of STA/FEB/Chemical Treatment Calculations

System Description	Value
STA or FEB?	FEB
Type of chemical or polishing system	Direct Filtration
Overall treatment goal, mg/L P	0.01
EAA data	
Average flow, mgd	189
Influent P concentration, mg/L	0.090
Lake Okeechobee Data	
Average flow, mgd	3
Influent P concentration, mg/L	0.090
Rainfall and Evapotranspiration	
Average rainfall on STA or FEB, mgd	8
Average evapotranspiration from STA or FEB,mgd	10
STA/FEB Data	
Influent flow, mgd	192
Influent P concentration, mg/L	0.090
Settling rate, m/day	10.2
Area, acres	2500
Delta depth, ft	8.0
Volume, mgal	6517
Effluent P, mg/L	0.081
Wet period fraction	1.00
Chemical System Data	
Capacity, mgd	660
Average flow treated, mgd	188
Effluent P, mg/L	0.009
Percent of days in operation	68
Combined Effluent Data	
Effluent P, mg/L	0.0100
P inventory at end of period	
% in STA or FEB sediments	12.2
% in STA or FEB water column	0.0
% removed by chemical treatment	77.0
% in in system effluent	10.8
Sum of %	100.0

Table 1. Summary of STA/FEB/Chemical Treatment Calculations

System Description	Value
STA or FEB?	FEB
Type of chemical or polishing system	Direct Filtration
Overall treatment goal, mg/L P	0.01
EAA data	
Average flow, mgd	189
Influent P concentration, mg/L	0.090
Lake Okeechobee Data	
Average flow, mgd	5
Influent P concentration, mg/L	0.090
Rainfall and Evapotranspiration	
Average rainfall on STA or FEB, mgd	13
Average evapotranspiration from STA or FEB,mgd	16
STA/FEB Data	
Influent flow, mgd	194
Influent P concentration, mg/L	0.090
Settling rate, m/day	10.2
Area, acres	4000
Delta depth, ft	8.0
Volume, mgal	10427
Effluent P, mg/L	0.081
Wet period fraction	1.00
Chemical System Data	
Capacity, mgd	535
Average flow treated, mgd	189
Effluent P, mg/L	0.009
Percent of days in operation	66
Combined Effluent Data	
Effluent P, mg/L	0.0100
P inventory at end of period	
% in STA or FEB sediments	13.5
% in STA or FEB water column	0.0
% removed by chemical treatment	75.8
% in in system effluent	10.7
Sum of %	100.0

Table 1. Summary of STA/FEB/Chemical Treatment Calculations

System Description	Value
STA or FEB?	FEB
Type of chemical or polishing system	Direct Filtration
Overall treatment goal, mg/L P	0.03
EAA data	
Average flow, mgd	189
Influent P concentration, mg/L	0.150
Lake Okeechobee Data	
Average flow, mgd	3
Influent P concentration, mg/L	0.090
Rainfall and Evapotranspiration	
Average rainfall on STA or FEB, mgd	7
Average evapotranspiration from STA or FEB,mgd	9
STA/FEB Data	
Influent flow, mgd	192
Influent P concentration, mg/L	0.149
Settling rate, m/day	10.2
Area, acres	2200
Delta depth, ft	8.0
Volume, mgal	5735
Effluent P, mg/L	0.122
Wet period fraction	1.00
Chemical System Data	
Capacity, mgd	756
Average flow treated, mgd	189
Effluent P, mg/L	0.009
Percent of days in operation	69
Combined Effluent Data	
Effluent P, mg/L	0.0099
P inventory at end of period	
% in STA or FEB sediments	19.4
% in STA or FEB water column	0.0
% removed by chemical treatment	74.1
% in in system effluent	6.5
Sum of %	100.0

Table 1. Summary of STA/FEB/Chemical Treatment Calculations

System Description	Value
STA or FEB?	FEB
Type of chemical or polishing system	DF
Overall treatment goal, mg/L P	0.01
EAA data	
Average flow, mgd	189
Influent P concentration, mg/L	0.150
Lake Okeechobee Data	
Average flow, mgd	4
Influent P concentration, mg/L	0.090
Rainfall and Evapotranspiration	
Average rainfall on STA or FEB, mgd	10
Average evapotranspiration from STA or FEB,mgd	12
STA/FEB Data	
Influent flow, mgd	193
Influent P concentration, mg/L	0.149
Settling rate, m/day	10.2
Area, acres	3000
Delta depth, ft	8.0
Volume, mgal	7820
Effluent P, mg/L	0.134
Wet period fraction	1.00
Chemical System Data	
Capacity, mgd	655
Average flow treated, mgd	189
Effluent P, mg/L	0.009
Percent of days in operation	66
Combined Effluent Data	
Effluent P, mg/L	0.0100
P inventory at end of period	
% in STA or FEB sediments	11.9
% in STA or FEB water column	0.0
% removed by chemical treatment	81.5
% in in system effluent	6.6
Sum of %	100.0

Table 1. Summary of STA/FEB/Chemical Treatment Calculations

System Description	Value
STA or FEB?	FEB
Type of chemical or polishing system	DF
Overall treatment goal, mg/L P	0.01
EAA data	
Average flow, mgd	189
Influent P concentration, mg/L	0.150
Lake Okeechobee Data	
Average flow, mgd	3
Influent P concentration, mg/L	0.090
Rainfall and Evapotranspiration	
Average rainfall on STA or FEB, mgd	9
Average evapotranspiration from STA or FEB,mgd	11
STA/FEB Data	
Influent flow, mgd	192
Influent P concentration, mg/L	0.149
Settling rate, m/day	10.2
Area, acres	2750
Delta depth, ft	8.0
Volume, mgal	7168
Effluent P, mg/L	0.134
Wet period fraction	1.00
Chemical System Data	
Capacity, mgd	680
Average flow treated, mgd	189
Effluent P, mg/L	0.009
Percent of days in operation	67
Combined Effluent Data	
Effluent P, mg/L	0.0100
P inventory at end of period	
% in STA or FEB sediments	11.8
% in STA or FEB water column	0.0
% removed by chemical treatment	81.7
% in in system effluent	6.6
Sum of %	100.0

Sensitivity Analysis

Tabulation of calculations

Treatment train Direct Filtration — C:\EVERGL\DATASH

Influent P, ppb	Particulate P in influent, %	Particulate P removed in FEB, %	Treatment goal, ppb P	Treatment plant effluent P, ppb	FEB, acres	Plant capacity, mgd	Average plant flow, mgd	Present worth, $ million	
		30							
	all the way	all the way							
150	30	60	30	9.0	500	404	154	256.40	
					1000	330	154	254.65	
					1500	294	154	255.99	
					1750	278	154	258.01	
					2000	264	154	262.46	
					4000	201	152	296.39	
150	30	60	10	9.0	500	1060	188	367.06	
					1000	945	188	359.63	
					2000	775	188	353.01	
					2500	700	189	349.55	
					4000	565	190	356.80	
90	30	60	30	9.0	500	245	126		
					1000	204	126	220.87	
					2000	166	126	232.55	
					2500	157	126	237.62	
					3000	149.5	125	244.45	
					4000	141	124	261.74	
90	30	60	10	9.0	500	975	190	354.31	
					1000	870	187	348.66	
					2000	705	187	342.76	
					2200	680	~~189~~ 187	~~340.54~~	342.69
					2500	640	187	~~340.08~~	342.23
					2700	630	188	~~342.66~~	344.81
					4000	525	188	350.10	

Sensitivity Analysis

Tabulation of calculations

C:\EVERGL\DATASH

Treatment train Direct Filtration

Influent P, ppb	Particulate P in influent, %	Particulate P removed in FEB, %	Treatment goal, ppb P	Treatment plant effluent P, ppb	FEB, acres	Plant capacity, mgd	Average plant flow, mgd	Present worth, $ million	
		30							
	all the way	all the way							
150	30	60	30	9.0	500	404	154	256.40	
					1000	330	154	254.65	
					1500	294	154	255.99	
					1750	278	154	258.01	
					2000	264	154	262.46	
					4000	201	152	296.39	
150	30	60	10	9.0	500	1060	188	367.06	
					1000	945	188	359.63	
					2000	775	188	353.01	
					2500	700	189	349.55	
					4000	565	190	356.80	
90	30	60	30	9.0	500	245			
					1000	204	126	220.87	
					2000	166	126	232.55	
					2500	157	126	237.62	
					3000	149.5	125	244.45	
					4000	141	124	261.74	
90	30	60	10	9.0	500	975	190	354.31	
					1000	870	187	348.66	
					2000	705	187	342.76	
					2200	680	187	340.54	342.69
					2500	640	187	340.08	342.23
					2700	630	188	342.66	344.81
					4000	525	188	350.10	

Table 1. Summary of STA/FEB/Chemical Treatment Calculations

System Description	Value
STA or FEB?	FEB
Type of chemical or polishing system	Direct Filtration
Overall treatment goal, mg/L P	0.03
EAA data	
Average flow, mgd	189
Influent P concentration, mg/L	0.150
Lake Okeechobee Data	
Average flow, mgd	1
Influent P concentration, mg/L	0.090
Rainfall and Evapotranspiration	
Average rainfall on STA or FEB, mgd	2
Average evapotranspiration from STA or FEB,mgd	2
STA/FEB Data	
Influent flow, mgd	190
Influent P concentration, mg/L	0.150
Settling rate, m/day	10.2
Area, acres	500
Delta depth, ft	8.0
Volume, mgal	1303
Effluent P, mg/L	0.120
Wet period fraction	1.00
Chemical System Data	
Capacity, mgd	404
Average flow treated, mgd	154
Effluent P, mg/L	0.009
Percent of days in operation	73
Combined Effluent Data	
Effluent P, mg/L	0.0300
P inventory at end of period	
% in STA or FEB sediments	20.3
% in STA or FEB water column	0.0
% removed by chemical treatment	59.8
% in in system effluent	19.9
Sum of %	100.0

Table 1. Summary of STA/FEB/Chemical Treatment Calculations

System Description	Value
STA or FEB?	FEB
Type of chemical or polishing system	Direct Filtration
Overall treatment goal, mg/L P	0.03
EAA data	
Average flow, mgd	189
Influent P concentration, mg/L	0.150
Lake Okeechobee Data	
Average flow, mgd	1
Influent P concentration, mg/L	0.090
Rainfall and Evapotranspiration	
Average rainfall on STA or FEB, mgd	3
Average evapotranspiration from STA or FEB,mgd	4
STA/FEB Data	
Influent flow, mgd	190
Influent P concentration, mg/L	0.150
Settling rate, m/day	10.2
Area, acres	1000
Delta depth, ft	8.0
Volume, mgal	2607
Effluent P, mg/L	0.120
Wet period fraction	1.00
Chemical System Data	
Capacity, mgd	330
Average flow treated, mgd	154
Effluent P, mg/L	0.009
Percent of days in operation	72
Combined Effluent Data	
Effluent P, mg/L	0.0300
P inventory at end of period	
% in STA or FEB sediments	20.6
% in STA or FEB water column	0.0
% removed by chemical treatment	59.5
% in in system effluent	19.9
Sum of %	100.0

Table 1. Summary of STA/FEB/Chemical Treatment Calculations

System Description	Value
STA or FEB?	FEB
Type of chemical or polishing system	Direct Filtration
Overall treatment goal, mg/L P	0.03
EAA data	
Average flow, mgd	189
Influent P concentration, mg/L	0.150
Lake Okeechobee Data	
Average flow, mgd	1
Influent P concentration, mg/L	0.090
Rainfall and Evapotranspiration	
Average rainfall on STA or FEB, mgd	5
Average evapotranspiration from STA or FEB,mgd	6
STA/FEB Data	
Influent flow, mgd	191
Influent P concentration, mg/L	0.150
Settling rate, m/day	10.2
Area, acres	1500
Delta depth, ft	8.0
Volume, mgal	3910
Effluent P, mg/L	0.120
Wet period fraction	1.00
Chemical System Data	
Capacity, mgd	294
Average flow treated, mgd	154
Effluent P, mg/L	0.009
Percent of days in operation	74
Combined Effluent Data	
Effluent P, mg/L	0.0300
P inventory at end of period	
% in STA or FEB sediments	20.7
% in STA or FEB water column	0.0
% removed by chemical treatment	59.5
% in in system effluent	19.8
Sum of %	100.0

Table 1. Summary of STA/FEB/Chemical Treatment Calculations

System Description	Value
STA or FEB?	FEB
Type of chemical or polishing system	Direct Filtration
Overall treatment goal, mg/L P	0.03
EAA data	
Average flow, mgd	189
Influent P concentration, mg/L	0.150
Lake Okeechobee Data	
Average flow, mgd	2
Influent P concentration, mg/L	0.090
Rainfall and Evapotranspiration	
Average rainfall on STA or FEB, mgd	6
Average evapotranspiration from STA or FEB,mgd	7
STA/FEB Data	
Influent flow, mgd	191
Influent P concentration, mg/L	0.149
Settling rate, m/day	10.2
Area, acres	1750
Delta depth, ft	8.0
Volume, mgal	4562
Effluent P, mg/L	0.120
Wet period fraction	1.00
Chemical System Data	
Capacity, mgd	278
Average flow treated, mgd	154
Effluent P, mg/L	0.009
Percent of days in operation	75
Combined Effluent Data	
Effluent P, mg/L	0.0300
P inventory at end of period	
% in STA or FEB sediments	20.9
% in STA or FEB water column	0.0
% removed by chemical treatment	59.3
% in in system effluent	19.8
Sum of %	100.0

Table 1. Summary of STA/FEB/Chemical Treatment Calculations

System Description	Value
STA or FEB?	FEB
Type of chemical or polishing system	Direct Filtration
Overall treatment goal, mg/L P	0.03
EAA data	
Average flow, mgd	189
Influent P concentration, mg/L	0.150
Lake Okeechobee Data	
Average flow, mgd	2
Influent P concentration, mg/L	0.090
Rainfall and Evapotranspiration	
Average rainfall on STA or FEB, mgd	7
Average evapotranspiration from STA or FEB,mgd	8
STA/FEB Data	
Influent flow, mgd	191
Influent P concentration, mg/L	0.149
Settling rate, m/day	10.2
Area, acres	2000
Delta depth, ft	8.0
Volume, mgal	5213
Effluent P, mg/L	0.120
Wet period fraction	1.00
Chemical System Data	
Capacity, mgd	264
Average flow treated, mgd	154
Effluent P, mg/L	0.009
Percent of days in operation	75
Combined Effluent Data	
Effluent P, mg/L	0.0300
P inventory at end of period	
% in STA or FEB sediments	21.2
% in STA or FEB water column	0.0
% removed by chemical treatment	59.0
% in in system effluent	19.8
Sum of %	100.0

Table 1. Summary of STA/FEB/Chemical Treatment Calculations

System Description	Value
STA or FEB?	FEB
Type of chemical or polishing system	Direct Filtration
Overall treatment goal, mg/L P	0.03
EAA data	
Average flow, mgd	189
Influent P concentration, mg/L	0.150
Lake Okeechobee Data	
Average flow, mgd	2
Influent P concentration, mg/L	0.090
Rainfall and Evapotranspiration	
Average rainfall on STA or FEB, mgd	13
Average evapotranspiration from STA or FEB,mgd	16
STA/FEB Data	
Influent flow, mgd	192
Influent P concentration, mg/L	0.149
Settling rate, m/day	10.2
Area, acres	4000
Delta depth, ft	8.0
Volume, mgal	10427
Effluent P, mg/L	0.119
Wet period fraction	1.00
Chemical System Data	
Capacity, mgd	201
Average flow treated, mgd	152
Effluent P, mg/L	0.009
Percent of days in operation	82
Combined Effluent Data	
Effluent P, mg/L	0.0300
P inventory at end of period	
% in STA or FEB sediments	22.4
% in STA or FEB water column	0.6
% removed by chemical treatment	57.6
% in in system effluent	19.4
Sum of %	100.0

Table 1. Summary of STA/FEB/Chemical Treatment Calculations

System Description	Value
STA or FEB?	FEB
Type of chemical or polishing system	Direct Filtration
Overall treatment goal, mg/L P	0.01
EAA data	
Average flow, mgd	189
Influent P concentration, mg/L	0.150
Lake Okeechobee Data	
Average flow, mgd	1
Influent P concentration, mg/L	0.090
Rainfall and Evapotranspiration	
Average rainfall on STA or FEB, mgd	2
Average evapotranspiration from STA or FEB,mgd	2
STA/FEB Data	
Influent flow, mgd	190
Influent P concentration, mg/L	0.150
Settling rate, m/day	10.2
Area, acres	500
Delta depth, ft	8.0
Volume, mgal	1303
Effluent P, mg/L	0.120
Wet period fraction	1.00
Chemical System Data	
Capacity, mgd	1060
Average flow treated, mgd	188
Effluent P, mg/L	0.009
Percent of days in operation	72
Combined Effluent Data	
Effluent P, mg/L	0.0100
P inventory at end of period	
% in STA or FEB sediments	20.3
% in STA or FEB water column	0.0
% removed by chemical treatment	73.1
% in in system effluent	6.6
Sum of %	100.0

Table 1. Summary of STA/FEB/Chemical Treatment Calculations

System Description	Value
STA or FEB?	FEB
Type of chemical or polishing system	Direct Filtration
Overall treatment goal, mg/L P	0.01
EAA data	
Average flow, mgd	189
Influent P concentration, mg/L	0.150
Lake Okeechobee Data	
Average flow, mgd	1
Influent P concentration, mg/L	0.090
Rainfall and Evapotranspiration	
Average rainfall on STA or FEB, mgd	3
Average evapotranspiration from STA or FEB,mgd	4
STA/FEB Data	
Influent flow, mgd	190
Influent P concentration, mg/L	0.150
Settling rate, m/day	10.2
Area, acres	1000
Delta depth, ft	8.0
Volume, mgal	2607
Effluent P, mg/L	0.120
Wet period fraction	1.00
Chemical System Data	
Capacity, mgd	945
Average flow treated, mgd	188
Effluent P, mg/L	0.009
Percent of days in operation	70
Combined Effluent Data	
Effluent P, mg/L	0.0100
P inventory at end of period	
% in STA or FEB sediments	20.6
% in STA or FEB water column	0.0
% removed by chemical treatment	72.8
% in in system effluent	6.6
Sum of %	100.0

Table 1. Summary of STA/FEB/Chemical Treatment Calculations

System Description	Value
STA or FEB?	FEB
Type of chemical or polishing system	Direct Filtration
Overall treatment goal, mg/L P	0.01
EAA data	
Average flow, mgd	189
Influent P concentration, mg/L	0.150
Lake Okeechobee Data	
Average flow, mgd	2
Influent P concentration, mg/L	0.090
Rainfall and Evapotranspiration	
Average rainfall on STA or FEB, mgd	7
Average evapotranspiration from STA or FEB,mgd	8
STA/FEB Data	
Influent flow, mgd	191
Influent P concentration, mg/L	0.149
Settling rate, m/day	10.2
Area, acres	2000
Delta depth, ft	8.0
Volume, mgal	5213
Effluent P, mg/L	0.119
Wet period fraction	1.00
Chemical System Data	
Capacity, mgd	775
Average flow treated, mgd	188
Effluent P, mg/L	0.009
Percent of days in operation	69
Combined Effluent Data	
Effluent P, mg/L	0.0100
P inventory at end of period	
% in STA or FEB sediments	21.2
% in STA or FEB water column	0.0
% removed by chemical treatment	72.2
% in in system effluent	6.6
Sum of %	100.0

Table 1. Summary of STA/FEB/Chemical Treatment Calculations

System Description	Value
STA or FEB?	FEB
Type of chemical or polishing system	Direct Filtration
Overall treatment goal, mg/L P	0.03
EAA data	
Average flow, mgd	189
Influent P concentration, mg/L	0.150
Lake Okeechobee Data	
Average flow, mgd	3
Influent P concentration, mg/L	0.090
Rainfall and Evapotranspiration	
Average rainfall on STA or FEB, mgd	8
Average evapotranspiration from STA or FEB,mgd	10
STA/FEB Data	
Influent flow, mgd	192
Influent P concentration, mg/L	0.149
Settling rate, m/day	10.2
Area, acres	2500
Delta depth, ft	8.0
Volume, mgal	6517
Effluent P, mg/L	0.122
Wet period fraction	1.00
Chemical System Data	
Capacity, mgd	700
Average flow treated, mgd	189
Effluent P, mg/L	0.009
Percent of days in operation	68
Combined Effluent Data	
Effluent P, mg/L	0.0100
P inventory at end of period	
% in STA or FEB sediments	19.5
% in STA or FEB water column	0.0
% removed by chemical treatment	73.9
% in in system effluent	6.6
Sum of %	100.0

Table 1. Summary of STA/FEB/Chemical Treatment Calculations

System Description	Value
STA or FEB?	FEB
Type of chemical or polishing system	Direct Filtration
Overall treatment goal, mg/L P	0.01
EAA data	
Average flow, mgd	189
Influent P concentration, mg/L	0.150
Lake Okeechobee Data	
Average flow, mgd	5
Influent P concentration, mg/L	0.090
Rainfall and Evapotranspiration	
Average rainfall on STA or FEB, mgd	13
Average evapotranspiration from STA or FEB,mgd	16
STA/FEB Data	
Influent flow, mgd	194
Influent P concentration, mg/L	0.149
Settling rate, m/day	10.2
Area, acres	4000
Delta depth, ft	8.0
Volume, mgal	10427
Effluent P, mg/L	0.119
Wet period fraction	1.00
Chemical System Data	
Capacity, mgd	565
Average flow treated, mgd	190
Effluent P, mg/L	0.009
Percent of days in operation	66
Combined Effluent Data	
Effluent P, mg/L	0.0100
P inventory at end of period	
% in STA or FEB sediments	22.4
% in STA or FEB water column	0.0
% removed by chemical treatment	71.1
% in in system effluent	6.5
Sum of %	100.0

Table 1. Summary of STA/FEB/Chemical Treatment Calculations

System Description	Value
STA or FEB?	FEB
Type of chemical or polishing system	Direct Filtration
Overall treatment goal, mg/L P	0.03
EAA data	
Average flow, mgd	189
Influent P concentration, mg/L	0.090
Lake Okeechobee Data	
Average flow, mgd	0
Influent P concentration, mg/L	0.090
Rainfall and Evapotranspiration	
Average rainfall on STA or FEB, mgd	2
Average evapotranspiration from STA or FEB,mgd	2
STA/FEB Data	
Influent flow, mgd	190
Influent P concentration, mg/L	0.090
Settling rate, m/day	10.2
Area, acres	500
Delta depth, ft	8.0
Volume, mgal	1303
Effluent P, mg/L	0.072
Wet period fraction	1.00
Chemical System Data	
Capacity, mgd	245
Average flow treated, mgd	126
Effluent P, mg/L	0.009
Percent of days in operation	75
Combined Effluent Data	
Effluent P, mg/L	0.0300
P inventory at end of period	
% in STA or FEB sediments	20.4
% in STA or FEB water column	0.0
% removed by chemical treatment	46.5
% in in system effluent	33.1
Sum of %	100.0

Table 1. Summary of STA/FEB/Chemical Treatment Calculations

System Description	Value
STA or FEB?	FEB
Type of chemical or polishing system	Direct Filtration
Overall treatment goal, mg/L P	0.03
EAA data	
Average flow, mgd	189
Influent P concentration, mg/L	0.090
Lake Okeechobee Data	
Average flow, mgd	1
Influent P concentration, mg/L	0.090
Rainfall and Evapotranspiration	
Average rainfall on STA or FEB, mgd	3
Average evapotranspiration from STA or FEB,mgd	4
STA/FEB Data	
Influent flow, mgd	190
Influent P concentration, mg/L	0.090
Settling rate, m/day	10.2
Area, acres	1000
Delta depth, ft	8.0
Volume, mgal	2607
Effluent P, mg/L	0.072
Wet period fraction	1.00
Chemical System Data	
Capacity, mgd	204
Average flow treated, mgd	126
Effluent P, mg/L	0.009
Percent of days in operation	76
Combined Effluent Data	
Effluent P, mg/L	0.0300
P inventory at end of period	
% in STA or FEB sediments	20.8
% in STA or FEB water column	0.0
% removed by chemical treatment	46.2
% in in system effluent	33.0
Sum of %	100.0

Table 1. Summary of STA/FEB/Chemical Treatment Calculations

System Description	Value
STA or FEB?	FEB
Type of chemical or polishing system	Direct Filtration
Overall treatment goal, mg/L P	0.03
EAA data	
Average flow, mgd	189
Influent P concentration, mg/L	0.090
Lake Okeechobee Data	
Average flow, mgd	1
Influent P concentration, mg/L	0.090
Rainfall and Evapotranspiration	
Average rainfall on STA or FEB, mgd	7
Average evapotranspiration from STA or FEB,mgd	8
STA/FEB Data	
Influent flow, mgd	190
Influent P concentration, mg/L	0.090
Settling rate, m/day	10.2
Area, acres	2000
Delta depth, ft	8.0
Volume, mgal	5213
Effluent P, mg/L	0.072
Wet period fraction	1.00
Chemical System Data	
Capacity, mgd	166
Average flow treated, mgd	126
Effluent P, mg/L	0.009
Percent of days in operation	84
Combined Effluent Data	
Effluent P, mg/L	0.0300
P inventory at end of period	
% in STA or FEB sediments	21.7
% in STA or FEB water column	0.2
% removed by chemical treatment	45.6
% in in system effluent	32.6
Sum of %	100.0

Table 1. Summary of STA/FEB/Chemical Treatment Calculations

System Description	Value
STA or FEB?	FEB
Type of chemical or polishing system	Direct Filtration
Overall treatment goal, mg/L P	0.03
EAA data	
Average flow, mgd	189
Influent P concentration, mg/L	0.090
Lake Okeechobee Data	
Average flow, mgd	1
Influent P concentration, mg/L	0.090
Rainfall and Evapotranspiration	
Average rainfall on STA or FEB, mgd	8
Average evapotranspiration from STA or FEB,mgd	10
STA/FEB Data	
Influent flow, mgd	190
Influent P concentration, mg/L	0.090
Settling rate, m/day	10.2
Area, acres	2500
Delta depth, ft	8.0
Volume, mgal	6517
Effluent P, mg/L	0.072
Wet period fraction	1.00
Chemical System Data	
Capacity, mgd	157
Average flow treated, mgd	126
Effluent P, mg/L	0.009
Percent of days in operation	86
Combined Effluent Data	
Effluent P, mg/L	0.0300
P inventory at end of period	
% in STA or FEB sediments	21.9
% in STA or FEB water column	0.3
% removed by chemical treatment	45.5
% in in system effluent	32.3
Sum of %	100.0

Table 1. Summary of STA/FEB/Chemical Treatment Calculations

System Description	Value
STA or FEB?	FEB
Type of chemical or polishing system	Direct Filtration
Overall treatment goal, mg/L P	0.03
EAA data	
Average flow, mgd	189
Influent P concentration, mg/L	0.090
Lake Okeechobee Data	
Average flow, mgd	1
Influent P concentration, mg/L	0.090
Rainfall and Evapotranspiration	
Average rainfall on STA or FEB, mgd	10
Average evapotranspiration from STA or FEB,mgd	12
STA/FEB Data	
Influent flow, mgd	190
Influent P concentration, mg/L	0.090
Settling rate, m/day	10.2
Area, acres	3000
Delta depth, ft	8.0
Volume, mgal	7820
Effluent P, mg/L	0.074
Wet period fraction	1.00
Chemical System Data	
Capacity, mgd	150
Average flow treated, mgd	125
Effluent P, mg/L	0.009
Percent of days in operation	87
Combined Effluent Data	
Effluent P, mg/L	0.0305
P inventory at end of period	
% in STA or FEB sediments	20.5
% in STA or FEB water column	0.5
% removed by chemical treatment	46.3
% in in system effluent	32.7
Sum of %	100.0

Table 1. Summary of STA/FEB/Chemical Treatment Calculations

System Description	Value
STA or FEB?	FEB
Type of chemical or polishing system	Direct Filtration
Overall treatment goal, mg/L P	0.03
EAA data	
Average flow, mgd	189
Influent P concentration, mg/L	0.090
Lake Okeechobee Data	
Average flow, mgd	1
Influent P concentration, mg/L	0.090
Rainfall and Evapotranspiration	
Average rainfall on STA or FEB, mgd	13
Average evapotranspiration from STA or FEB,mgd	16
STA/FEB Data	
Influent flow, mgd	190
Influent P concentration, mg/L	0.090
Settling rate, m/day	10.2
Area, acres	4000
Delta depth, ft	8.0
Volume, mgal	10427
Effluent P, mg/L	0.072
Wet period fraction	1.00
Chemical System Data	
Capacity, mgd	141
Average flow treated, mgd	124
Effluent P, mg/L	0.009
Percent of days in operation	91
Combined Effluent Data	
Effluent P, mg/L	0.0300
P inventory at end of period	
% in STA or FEB sediments	23.3
% in STA or FEB water column	0.8
% removed by chemical treatment	44.3
% in in system effluent	31.6
Sum of %	100.0

Table 1. Summary of STA/FEB/Chemical Treatment Calculations

System Description	Value
STA or FEB?	FEB
Type of chemical or polishing system	Direct Filtration
Overall treatment goal, mg/L P	0.01
EAA data	
Average flow, mgd	189
Influent P concentration, mg/L	0.090
Lake Okeechobee Data	
Average flow, mgd	1
Influent P concentration, mg/L	0.090
Rainfall and Evapotranspiration	
Average rainfall on STA or FEB, mgd	2
Average evapotranspiration from STA or FEB,mgd	2
STA/FEB Data	
Influent flow, mgd	190
Influent P concentration, mg/L	0.090
Settling rate, m/day	10.2
Area, acres	500
Delta depth, ft	8.0
Volume, mgal	1303
Effluent P, mg/L	0.072
Wet period fraction	1.00
Chemical System Data	
Capacity, mgd	975
Average flow treated, mgd	186
Effluent P, mg/L	0.009
Percent of days in operation	72
Combined Effluent Data	
Effluent P, mg/L	0.0100
P inventory at end of period	
% in STA or FEB sediments	20.4
% in STA or FEB water column	0.0
% removed by chemical treatment	68.5
% in in system effluent	11.1
Sum of %	100.0

Table 1. Summary of STA/FEB/Chemical Treatment Calculations

System Description	Value
STA or FEB?	FEB
Type of chemical or polishing system	Direct Filtration
Overall treatment goal, mg/L P	0.01
EAA data	
Average flow, mgd	189
Influent P concentration, mg/L	0.090
Lake Okeechobee Data	
Average flow, mgd	1
Influent P concentration, mg/L	0.090
Rainfall and Evapotranspiration	
Average rainfall on STA or FEB, mgd	3
Average evapotranspiration from STA or FEB,mgd	4
STA/FEB Data	
Influent flow, mgd	190
Influent P concentration, mg/L	0.090
Settling rate, m/day	10.2
Area, acres	1000
Delta depth, ft	8.0
Volume, mgal	2607
Effluent P, mg/L	0.072
Wet period fraction	1.00
Chemical System Data	
Capacity, mgd	870
Average flow treated, mgd	187
Effluent P, mg/L	0.009
Percent of days in operation	70
Combined Effluent Data	
Effluent P, mg/L	0.0100
P inventory at end of period	
% in STA or FEB sediments	20.8
% in STA or FEB water column	0.0
% removed by chemical treatment	68.2
% in in system effluent	11.0
Sum of %	100.0

Table 1. Summary of STA/FEB/Chemical Treatment Calculations

System Description	Value
STA or FEB?	FEB
Type of chemical or polishing system	Direct Filtration
Overall treatment goal, mg/L P	0.01
EAA data	
Average flow, mgd	189
Influent P concentration, mg/L	0.090
Lake Okeechobee Data	
Average flow, mgd	2
Influent P concentration, mg/L	0.090
Rainfall and Evapotranspiration	
Average rainfall on STA or FEB, mgd	7
Average evapotranspiration from STA or FEB,mgd	8
STA/FEB Data	
Influent flow, mgd	191
Influent P concentration, mg/L	0.090
Settling rate, m/day	10.2
Area, acres	2000
Delta depth, ft	8.0
Volume, mgal	5213
Effluent P, mg/L	0.072
Wet period fraction	1.00
Chemical System Data	
Capacity, mgd	705
Average flow treated, mgd	187
Effluent P, mg/L	0.009
Percent of days in operation	69
Combined Effluent Data	
Effluent P, mg/L	0.0100
P inventory at end of period	
% in STA or FEB sediments	21.6
% in STA or FEB water column	0.0
% removed by chemical treatment	67.5
% in in system effluent	10.8
Sum of %	100.0

Table 1. Summary of STA/FEB/Chemical Treatment Calculations

System Description	Value
STA or FEB?	FEB
Type of chemical or polishing system	Direct Filtration
Overall treatment goal, mg/L P	0.03
EAA data	
Average flow, mgd	189
Influent P concentration, mg/L	0.090
Lake Okeechobee Data	
Average flow, mgd	3
Influent P concentration, mg/L	0.090
Rainfall and Evapotranspiration	
Average rainfall on STA or FEB, mgd	7
Average evapotranspiration from STA or FEB,mgd	9
STA/FEB Data	
Influent flow, mgd	192
Influent P concentration, mg/L	0.090
Settling rate, m/day	10.2
Area, acres	2200
Delta depth, ft	8.0
Volume, mgal	5735
Effluent P, mg/L	0.074
Wet period fraction	1.00
Chemical System Data	
Capacity, mgd	680
Average flow treated, mgd	187
Effluent P, mg/L	0.009
Percent of days in operation	69
Combined Effluent Data	
Effluent P, mg/L	0.0100
P inventory at end of period	
% in STA or FEB sediments	19.9
% in STA or FEB water column	0.0
% removed by chemical treatment	69.3
% in in system effluent	10.9
Sum of %	100.0

Table 1. Summary of STA/FEB/Chemical Treatment Calculations

System Description	Value
STA or FEB?	FEB
Type of chemical or polishing system	Direct Filtration
Overall treatment goal, mg/L P	0.03
EAA data	
Average flow, mgd	189
Influent P concentration, mg/L	0.090
Lake Okeechobee Data	
Average flow, mgd	3
Influent P concentration, mg/L	0.090
Rainfall and Evapotranspiration	
Average rainfall on STA or FEB, mgd	8
Average evapotranspiration from STA or FEB,mgd	10
STA/FEB Data	
Influent flow, mgd	192
Influent P concentration, mg/L	0.090
Settling rate, m/day	10.2
Area, acres	2500
Delta depth, ft	8.0
Volume, mgal	6517
Effluent P, mg/L	0.074
Wet period fraction	1.00
Chemical System Data	
Capacity, mgd	640
Average flow treated, mgd	187
Effluent P, mg/L	0.009
Percent of days in operation	68
Combined Effluent Data	
Effluent P, mg/L	0.0101
P inventory at end of period	
% in STA or FEB sediments	20.1
% in STA or FEB water column	0.0
% removed by chemical treatment	69.0
% in in system effluent	10.9
Sum of %	100.0

Table 1. Summary of STA/FEB/Chemical Treatment Calculations

System Description	Value
STA or FEB?	FEB
Type of chemical or polishing system	Direct Filtration
Overall treatment goal, mg/L P	0.03
EAA data	
Average flow, mgd	189
Influent P concentration, mg/L	0.090
Lake Okeechobee Data	
Average flow, mgd	3
Influent P concentration, mg/L	0.090
Rainfall and Evapotranspiration	
Average rainfall on STA or FEB, mgd	9
Average evapotranspiration from STA or FEB,mgd	11
STA/FEB Data	
Influent flow, mgd	192
Influent P concentration, mg/L	0.090
Settling rate, m/day	10.2
Area, acres	2700
Delta depth, ft	8.0
Volume, mgal	7038
Effluent P, mg/L	0.074
Wet period fraction	1.00
Chemical System Data	
Capacity, mgd	630
Average flow treated, mgd	188
Effluent P, mg/L	0.009
Percent of days in operation	67
Combined Effluent Data	
Effluent P, mg/L	0.0100
P inventory at end of period	
% in STA or FEB sediments	20.3
% in STA or FEB water column	0.0
% removed by chemical treatment	68.9
% in in system effluent	10.8
Sum of %	100.0

Table 1. Summary of STA/FEB/Chemical Treatment Calculations

System Description	Value
STA or FEB?	FEB
Type of chemical or polishing system	Direct Filtration
Overall treatment goal, mg/L P	0.01
EAA data	
Average flow, mgd	189
Influent P concentration, mg/L	0.090
Lake Okeechobee Data	
Average flow, mgd	5
Influent P concentration, mg/L	0.090
Rainfall and Evapotranspiration	
Average rainfall on STA or FEB, mgd	13
Average evapotranspiration from STA or FEB,mgd	16
STA/FEB Data	
Influent flow, mgd	194
Influent P concentration, mg/L	0.090
Settling rate, m/day	10.2
Area, acres	4000
Delta depth, ft	8.0
Volume, mgal	10427
Effluent P, mg/L	0.072
Wet period fraction	1.00
Chemical System Data	
Capacity, mgd	525
Average flow treated, mgd	188
Effluent P, mg/L	0.009
Percent of days in operation	67
Combined Effluent Data	
Effluent P, mg/L	0.0100
P inventory at end of period	
% in STA or FEB sediments	23.2
% in STA or FEB water column	0.0
% removed by chemical treatment	66.1
% in in system effluent	10.6
Sum of %	100.0

APPENDIX H

SENSITIVITY ON DISCOUNT RATE BACK-UP

Present Worth Calculations for Stormwater Treatment Areas (STAs)
(interest rate = 7.625%, discount rate = 0%, net = 7.625%)

Parameter	Influent/Effluent P Levels									
	150/50	150/40	150/30	150/20	150/10	90/50	90/40	90/30	90/20	90/10
Basis of Design										
Influent PS capacity, mgd	2330	2330	2330	0	0	2330	2330	2330	0	0
Influent PS average flow, mgd	189	189	189	0	0	189	189	189	0	0
STA area, acres	7410	8965	11020	0	0	4040	5620	7695	0	0
FEB area, acres	0	0	0	0	0	0	0	0	0	0
Treatment plant influent PS capacity, mgd	0	0	0	0	0	0	0	0	0	0
Treatment plant influent PS average flow, mgd	0	0	0	0	0	0	0	0	0	0
Treatment plant land area, acres	0	0	0	0	0	0	0	0	0	0
Sludge disposal area, acres	0	0	0	0	0	0	0	0	0	0
Effluent PS capacity, mgd	2330	2330	2330	0	0	2330	2330	2330	0	0
Effluent PS average flow, mgd	189	189	189	0	0	189	189	189	0	0
Total land area, acres	8151	9861.5	12122	0	0	4444	6182	8464.5	0	0
Capital Costs, $ million										
Influent pumping station	17.87	17.87	17.87	0.00	0.00	17.87	17.87	17.87	0.00	0.00
STA	33.96	41.09	50.50	0.00	0.00	18.52	25.76	35.27	0.00	0.00
STA seepage pump station	0.78	0.95	1.17	0.00	0.00	0.43	0.59	0.81	0.00	0.00
FEB	0.00	0.00	0.00	0.00	0.00	0.00	0.00	0.00	0.00	0.00
FEB seepage pump station	0.00	0.00	0.00	0.00	0.00	0.00	0.00	0.00	0.00	0.00
Treatment plant influent pump station	0.00	0.00	0.00	0.00	0.00	0.00	0.00	0.00	0.00	0.00
Treatment plant	0.00	0.00	0.00	0.00	0.00	0.00	0.00	0.00	0.00	0.00
Sludge treatment and disposal	0.00	0.00	0.00	0.00	0.00	0.00	0.00	0.00	0.00	0.00
Effluent pump station	17.87	17.87	17.87	0.00	0.00	17.87	17.87	17.87	0.00	0.00
Subtotal	70.49	77.78	87.41	0.00	0.00	54.68	62.09	71.82	0.00	0.00
Construction contingencies (20 percent)	14.10	15.56	17.48	0.00	0.00	10.94	12.42	14.36	0.00	0.00
Subtotal, construction costs	84.58	93.33	104.90	0.00	0.00	65.62	74.51	86.19	0.00	0.00
Engineering (15 percent)	12.69	14.00	15.73	0.00	0.00	9.84	11.18	12.93	0.00	0.00
Land purchase - STA	28.53	34.52	42.43	0.00	0.00	15.55	21.64	29.63	0.00	0.00
Land purchase - FEB	0.00	0.00	0.00	0.00	0.00	0.00	0.00	0.00	0.00	0.00
Land purchase - treatment plant	0.00	0.00	0.00	0.00	0.00	0.00	0.00	0.00	0.00	0.00
Land purchase - sludge disposal	0.00	0.00	0.00	0.00	0.00	0.00	0.00	0.00	0.00	0.00
Total Capital Cost	125.80	141.85	163.06	0.00	0.00	91.02	107.33	128.74	0.00	0.00
Present Worth - Capital Cost	125.80	141.85	163.06	0.00	0.00	91.02	107.33	128.74	0.00	0.00
O&M Costs, $ million/yr										
Influent pumping station	0.52	0.52	0.52	0.00	0.00	0.52	0.52	0.52	0.00	0.00
STA	0.22	0.27	0.33	0.00	0.00	0.12	0.17	0.23	0.00	0.00
STA seepage pump station	0.12	0.15	0.18	0.00	0.00	0.07	0.10	0.13	0.00	0.00
STA sampling and monitoring	0.30	0.30	0.30	0.00	0.00	0.30	0.30	0.30	0.00	0.00
FEB	0.00	0.00	0.00	0.00	0.00	0.00	0.00	0.00	0.00	0.00
FEB seepage pump station	0.00	0.00	0.00	0.00	0.00	0.00	0.00	0.00	0.00	0.00
Treatment plant influent pump station	0.00	0.00	0.00	0.00	0.00	0.00	0.00	0.00	0.00	0.00
Chemicals	0.00	0.00	0.00	0.00	0.00	0.00	0.00	0.00	0.00	0.00
Sludge treatment and disposal	0.00	0.00	0.00	0.00	0.00	0.00	0.00	0.00	0.00	0.00
Other treatment plant O&M	0.00	0.00	0.00	0.00	0.00	0.00	0.00	0.00	0.00	0.00
Treatment plant sampling and monitoring	0.00	0.00	0.00	0.00	0.00	0.00	0.00	0.00	0.00	0.00
Effluent pump station	0.52	0.52	0.52	0.00	0.00	0.52	0.52	0.52	0.00	0.00
Total Annual O&M Cost	1.69	1.76	1.86	0.00	0.00	1.54	1.61	1.71	0.00	0.00
Present Worth - Annual O&M Cost	21.66	22.56	23.75	0.00	0.00	19.70	20.62	21.82	0.00	0.00
Present Worth - Replacement Costs, $million										
Influent pump station	0.71	0.71	0.71	0.00	0.00	0.71	0.71	0.71	0.00	0.00
STA seepage pump station	0.06	0.08	0.09	0.00	0.00	0.03	0.05	0.06	0.00	0.00
FEB seepage pump station	0.00	0.00	0.00	0.00	0.00	0.00	0.00	0.00	0.00	0.00
Treatment plant influent pump station	0.00	0.00	0.00	0.00	0.00	0.00	0.00	0.00	0.00	0.00
Chemical feed system	0.00	0.00	0.00	0.00	0.00	0.00	0.00	0.00	0.00	0.00
Other major treatment plant equipment	0.00	0.00	0.00	0.00	0.00	0.00	0.00	0.00	0.00	0.00
Sludge treatment and disposal	0.00	0.00	0.00	0.00	0.00	0.00	0.00	0.00	0.00	0.00
Effluent pump station	0.71	0.71	0.71	0.00	0.00	0.71	0.71	0.71	0.00	0.00
Total Present Worth - Replacement Costs	1.49	1.50	1.52	0.00	0.00	1.46	1.47	1.49	0.00	0.00
Salvage Value, $ million										
Influent pump station demolition cost	(3.57)	(3.57)	(3.57)	0.00	0.00	(3.57)	(3.57)	(3.57)	0.00	0.00
STA seepage pump station demolition cost	(0.16)	(0.19)	(0.23)	0.00	0.00	(0.09)	(0.12)	(0.16)	0.00	0.00
FEB seepage pump station demolition cost	0.00	0.00	0.00	0.00	0.00	0.00	0.00	0.00	0.00	0.00
Treatment plant influent pump station demolition cost	0.00	0.00	0.00	0.00	0.00	0.00	0.00	0.00	0.00	0.00
Treatment plant demolition cost	0.00	0.00	0.00	0.00	0.00	0.00	0.00	0.00	0.00	0.00
Effluent pump station demolition cost	(3.57)	(3.57)	(3.57)	0.00	0.00	(3.57)	(3.57)	(3.57)	0.00	0.00
STA restoration cost	(4.08)	(4.49)	(4.98)	0.00	0.00	(3.01)	(3.56)	(4.16)	0.00	0.00
FEB restoration cost	0.00	0.00	0.00	0.00	0.00	0.00	0.00	0.00	0.00	0.00
Sludge land restoration cost	0.00	0.00	0.00	0.00	0.00	0.00	0.00	0.00	0.00	0.00
STA land value	28.53	34.52	42.43	0.00	0.00	15.55	21.64	29.63	0.00	0.00
FEB land value	0.00	0.00	0.00	0.00	0.00	0.00	0.00	0.00	0.00	0.00
Treatment plant land value	0.00	0.00	0.00	0.00	0.00	0.00	0.00	0.00	0.00	0.00
Sludge land value	0.00	0.00	0.00	0.00	0.00	0.00	0.00	0.00	0.00	0.00
Net Salvage Value	17.14	22.69	30.07	0.00	0.00	5.31	10.81	18.15	0.00	0.00
Present Worth - Salvage Value	0.43	0.58	0.76	0.00	0.00	0.13	0.27	0.46	0.00	0.00
50 - Year Present Worth, $ million										
Capital Cost	125.80	141.85	163.06	0.00	0.00	91.02	107.33	128.74	0.00	0.00
O&M Cost	21.66	22.56	23.75	0.00	0.00	19.70	20.62	21.82	0.00	0.00
Replacement Cost	1.49	1.50	1.52	0.00	0.00	1.46	1.47	1.49	0.00	0.00
Salvage Value	(0.43)	(0.58)	(0.76)	0.00	0.00	(0.13)	(0.27)	(0.46)	0.00	0.00
Total	148.51	165.33	187.56	0.00	0.00	112.04	129.14	151.59	0.00	0.00
Present worth, $/million gallons treated	43.05	47.93	54.38	0.00	0.00	32.48	37.44	43.95	0.00	0.00
Present worth, $/pound P removed	51.62	52.25	54.33	0.00	0.00	97.37	89.78	87.83	0.00	0.00

Present Worth Calculations for Stormwater Treatment Areas (STAs)
(interest rate = 6.8%, discount rate = 2.8%, net = 4.0%)

Parameter	Influent/Effluent P Levels									
	150/50	150/40	150/30	150/20	150/10	90/50	90/40	90/30	90/20	90/10
Basis of Design										
Influent PS capacity, mgd	2330	2330	2330	0	0	2330	2330	2330	0	0
Influent PS average flow, mgd	189	189	189	0	0	189	189	189	0	0
STA area, acres	7410	8965	11020	0	0	4040	5620	7695	0	0
FEB area, acres	0	0	0	0	0	0	0	0	0	0
Treatment plant influent PS capacity, mgd	0	0	0	0	0	0	0	0	0	0
Treatment plant influent PS average flow, mgd	0	0	0	0	0	0	0	0	0	0
Treatment plant land area, acres	0	0	0	0	0	0	0	0	0	0
Sludge disposal area, acres	0	0	0	0	0	0	0	0	0	0
Effluent PS capacity, mgd	2330	2330	2330	0	0	2330	2330	2330	0	0
Effluent PS average flow, mgd	189	189	189	0	0	189	189	189	0	0
Total land area, acres	8151	9861.5	12122	0	0	4444	6182	8464.5	0	0
Capital Costs, $ million										
Influent pumping station	17.87	17.87	17.87	0.00	0.00	17.87	17.87	17.87	0.00	0.00
STA	33.96	41.09	50.50	0.00	0.00	18.52	25.76	35.27	0.00	0.00
STA seepage pump station	0.78	0.95	1.17	0.00	0.00	0.43	0.59	0.81	0.00	0.00
FEB	0.00	0.00	0.00	0.00	0.00	0.00	0.00	0.00	0.00	0.00
FEB seepage pump station	0.00	0.00	0.00	0.00	0.00	0.00	0.00	0.00	0.00	0.00
Treatment plant influent pump station	0.00	0.00	0.00	0.00	0.00	0.00	0.00	0.00	0.00	0.00
Treatment plant	0.00	0.00	0.00	0.00	0.00	0.00	0.00	0.00	0.00	0.00
Sludge treatment and disposal	0.00	0.00	0.00	0.00	0.00	0.00	0.00	0.00	0.00	0.00
Effluent pump station	17.87	17.87	17.87	0.00	0.00	17.87	17.87	17.87	0.00	0.00
Subtotal	70.49	77.78	87.41	0.00	0.00	54.68	62.09	71.82	0.00	0.00
Construction contingencies (20 percent)	14.10	15.56	17.48	0.00	0.00	10.94	12.42	14.36	0.00	0.00
Subtotal, construction costs	84.58	93.33	104.90	0.00	0.00	65.62	74.51	86.19	0.00	0.00
Engineering (15 percent)	12.69	14.00	15.73	0.00	0.00	9.84	11.18	12.93	0.00	0.00
Land purchase - STA	28.53	34.52	42.43	0.00	0.00	15.55	21.64	29.63	0.00	0.00
Land purchase - FEB	0.00	0.00	0.00	0.00	0.00	0.00	0.00	0.00	0.00	0.00
Land purchase - treatment plant	0.00	0.00	0.00	0.00	0.00	0.00	0.00	0.00	0.00	0.00
Land purchase - sludge disposal	0.00	0.00	0.00	0.00	0.00	0.00	0.00	0.00	0.00	0.00
Total Capital Cost	125.80	141.85	163.06	0.00	0.00	91.02	107.33	128.74	0.00	0.00
Present Worth - Capital Cost	125.80	141.85	163.06	0.00	0.00	91.02	107.33	128.74	0.00	0.00
O&M Costs, $ million/yr										
Influent pumping station	0.52	0.52	0.52	0.00	0.00	0.52	0.52	0.52	0.00	0.00
STA	0.22	0.27	0.33	0.00	0.00	0.12	0.17	0.23	0.00	0.00
STA seepage pump station	0.12	0.15	0.18	0.00	0.00	0.07	0.10	0.13	0.00	0.00
STA sampling and monitoring	0.30	0.30	0.30	0.00	0.00	0.30	0.30	0.30	0.00	0.00
FEB	0.00	0.00	0.00	0.00	0.00	0.00	0.00	0.00	0.00	0.00
FEB seepage pump station	0.00	0.00	0.00	0.00	0.00	0.00	0.00	0.00	0.00	0.00
Treatment plant influent pump station	0.00	0.00	0.00	0.00	0.00	0.00	0.00	0.00	0.00	0.00
Chemicals	0.00	0.00	0.00	0.00	0.00	0.00	0.00	0.00	0.00	0.00
Sludge treatment and disposal	0.00	0.00	0.00	0.00	0.00	0.00	0.00	0.00	0.00	0.00
Other treatment plant O&M	0.00	0.00	0.00	0.00	0.00	0.00	0.00	0.00	0.00	0.00
Treatment plant sampling and monitoring	0.00	0.00	0.00	0.00	0.00	0.00	0.00	0.00	0.00	0.00
Effluent pump station	0.52	0.52	0.52	0.00	0.00	0.52	0.52	0.52	0.00	0.00
Total Annual O&M Cost	1.69	1.76	1.86	0.00	0.00	1.54	1.61	1.71	0.00	0.00
Present Worth - Annual O&M Cost	36.40	37.91	39.92	0.00	0.00	33.11	34.65	36.67	0.00	0.00
Present Worth - Replacement Costs, $million										
Infuent pump station	1.68	1.68	1.68	0.00	0.00	1.68	1.68	1.68	0.00	0.00
STA seepage pump station	0.15	0.18	0.22	0.00	0.00	0.08	0.11	0.15	0.00	0.00
FEB seepage pump station	0.00	0.00	0.00	0.00	0.00	0.00	0.00	0.00	0.00	0.00
Treatment plant influent pump station	0.00	0.00	0.00	0.00	0.00	0.00	0.00	0.00	0.00	0.00
Chemical feed system	0.00	0.00	0.00	0.00	0.00	0.00	0.00	0.00	0.00	0.00
Other major treatment plant equipment	0.00	0.00	0.00	0.00	0.00	0.00	0.00	0.00	0.00	0.00
Sludge treatment and disposal	0.00	0.00	0.00	0.00	0.00	0.00	0.00	0.00	0.00	0.00
Effluent pump station	1.68	1.68	1.68	0.00	0.00	1.68	1.68	1.68	0.00	0.00
Total Present Worth - Replacement Costs	3.50	3.53	3.57	0.00	0.00	3.43	3.46	3.50	0.00	0.00
Salvage Value, $ million										
Influent pump station demolition cost	(3.57)	(3.57)	(3.57)	0.00	0.00	(3.57)	(3.57)	(3.57)	0.00	0.00
STA seepage pump station demolition cost	(0.16)	(0.19)	(0.23)	0.00	0.00	(0.09)	(0.12)	(0.16)	0.00	0.00
FEB seepage pump station demolition cost	0.00	0.00	0.00	0.00	0.00	0.00	0.00	0.00	0.00	0.00
Treatment plant influent pump station demolition cost	0.00	0.00	0.00	0.00	0.00	0.00	0.00	0.00	0.00	0.00
Treatment plant demolition cost	0.00	0.00	0.00	0.00	0.00	0.00	0.00	0.00	0.00	0.00
Effluent pump station demolition cost	(3.57)	(3.57)	(3.57)	0.00	0.00	(3.57)	(3.57)	(3.57)	0.00	0.00
STA restoration cost	(4.08)	(4.49)	(4.98)	0.00	0.00	(3.01)	(3.56)	(4.16)	0.00	0.00
FEB restoration cost	0.00	0.00	0.00	0.00	0.00	0.00	0.00	0.00	0.00	0.00
Sludge land restoration cost	0.00	0.00	0.00	0.00	0.00	0.00	0.00	0.00	0.00	0.00
STA land value	28.53	34.52	42.43	0.00	0.00	15.55	21.64	29.63	0.00	0.00
FEB land value	0.00	0.00	0.00	0.00	0.00	0.00	0.00	0.00	0.00	0.00
Treatment plant land value	0.00	0.00	0.00	0.00	0.00	0.00	0.00	0.00	0.00	0.00
Sludge land value	0.00	0.00	0.00	0.00	0.00	0.00	0.00	0.00	0.00	0.00
Net Salvage Value	17.14	22.69	30.07	0.00	0.00	5.31	10.81	18.15	0.00	0.00
Present Worth - Salvage Value	2.41	3.19	4.23	0.00	0.00	0.75	1.52	2.55	0.00	0.00
50 - Year Present Worth, $ million										
Capital Cost	125.80	141.85	163.06	0.00	0.00	91.02	107.33	128.74	0.00	0.00
O&M Cost	36.40	37.91	39.92	0.00	0.00	33.11	34.65	36.67	0.00	0.00
Replacement Cost	3.50	3.53	3.57	0.00	0.00	3.43	3.46	3.50	0.00	0.00
Salvage Value	(2.41)	(3.19)	(4.23)	0.00	0.00	(0.75)	(1.52)	(2.55)	0.00	0.00
Total	163.28	180.10	202.31	0.00	0.00	126.81	143.92	166.36	0.00	0.00
Present worth, $/million gallons treated	47.34	52.21	58.65	0.00	0.00	36.77	41.72	48.23	0.00	0.00
Present worth, $/pound P removed	56.76	56.91	58.61	0.00	0.00	110.21	100.06	96.39	0.00	0.00

Present Worth Calculations for STA - Chemical Treatment/Direct Filtration
(interest rate = 6.8%, discount rate = 2.8%, net = 4.0%)

Parameter	Influent/Effluent P Levels									
	150/50	150/40	150/30	150/20	150/10	90/50	90/40	90/30	90/20	90/10
Basis of Design										
Influent PS capacity, mgd	2330	2330	2330	2330	2330	2330	2330	2330	2330	2330
Influent PS average flow, mgd	189	189	189	189	189	189	189	189	189	189
STA area, acres	7410	7410	7410	7410	7410	4040	4040	4040	4040	4040
FEB area, acres	0	0	0	0	0	0	0	0	0	0
Treatment plant influent PS capacity, mgd	0	42	89	155	360	0	43	95	181	420
Treatment plant influent PS average flow, mgd	0	42	83	128	176	0	42	86	130	174
Treatment plant land area, acres	0	9	17	27	37	0	9	18	27	37
Sludge disposal area, acres	0	88	174	269	370	0	88	181	273	365
Effluent PS capacity, mgd	2330	2330	2330	2330	2330	2330	2330	2330	2330	2330
Effluent PS average flow, mgd	189	189	189	189	189	189	189	189	189	189
Total land area, acres	8,151	8,258	8,362	8,476	8,598	4,444	4,551	4,663	4,774	4,886
Capital Costs, $ million										
Influent pumping station	17.87	17.87	17.87	17.87	17.87	17.87	17.87	17.87	17.87	17.87
STA	33.96	33.96	33.96	33.96	33.96	18.52	18.52	18.52	18.52	18.52
STA seepage pump station	0.78	0.78	0.78	0.78	0.78	0.43	0.43	0.43	0.43	0.43
FEB	0.00	0.00	0.00	0.00	0.00	0.00	0.00	0.00	0.00	0.00
FEB seepage pump station	0.00	0.00	0.00	0.00	0.00	0.00	0.00	0.00	0.00	0.00
Treatment plant influent pump station	0.00	0.40	0.85	1.49	3.45	0.00	0.41	0.91	1.74	4.03
Treatment plant	0.00	11.26	14.90	20.01	35.90	0.00	11.33	15.36	22.03	40.55
Sludge treatment and disposal	0.00	0.84	1.66	2.56	3.52	0.00	0.84	1.72	2.60	3.48
Effluent pump station	17.87	17.87	17.87	17.87	17.87	17.87	17.87	17.87	17.87	17.87
Subtotal	70.49	82.98	87.90	94.55	113.36	54.68	67.27	72.68	81.05	102.74
Construction contingencies (20 percent)	14.10	16.60	17.58	18.91	22.67	10.94	13.45	14.54	16.21	20.55
Subtotal, construction costs	84.58	99.58	105.48	113.45	136.03	65.62	80.72	87.21	97.26	123.29
Engineering (15 percent)	12.69	14.94	15.82	17.02	20.40	9.84	12.11	13.08	14.59	18.49
Land purchase - STA	28.53	28.53	28.53	28.53	28.53	15.55	15.55	15.55	15.55	15.55
Land purchase - FEB	0.00	0.00	0.00	0.00	0.00	0.00	0.00	0.00	0.00	0.00
Land purchase - treatment plant	0.00	0.03	0.07	0.10	0.14	0.00	0.03	0.07	0.11	0.14
Land purchase - sludge disposal	0.00	0.34	0.67	1.03	1.42	0.00	0.34	0.70	1.05	1.41
Total Capital Cost	125.80	143.42	150.56	160.14	186.53	91.02	108.76	116.62	128.56	158.89
Present Worth - Capital Cost	125.80	143.42	150.56	160.14	186.53	91.02	108.76	116.62	128.56	158.89
O&M Costs, $ million/yr										
Influent pumping station	0.52	0.52	0.52	0.52	0.52	0.52	0.52	0.52	0.52	0.52
STA	0.22	0.22	0.22	0.22	0.22	0.12	0.12	0.12	0.12	0.12
STA seepage pump station	0.12	0.12	0.12	0.12	0.12	0.07	0.07	0.07	0.07	0.07
STA sampling and monitoring	0.30	0.30	0.30	0.30	0.30	0.30	0.30	0.30	0.30	0.30
FEB	0.00	0.00	0.00	0.00	0.00	0.00	0.00	0.00	0.00	0.00
FEB seepage pump station	0.00	0.00	0.00	0.00	0.00	0.00	0.00	0.00	0.00	0.00
Treatment plant influent pump station	0.00	0.26	0.32	0.38	0.45	0.00	0.26	0.32	0.38	0.44
Chemicals	0.00	0.73	1.44	2.23	3.06	0.00	0.73	1.50	2.26	3.03
Sludge treatment and disposal	0.00	0.05	0.10	0.15	0.20	0.00	0.05	0.10	0.15	0.20
Other treatment plant O&M	0.00	0.26	0.51	0.78	1.07	0.00	0.26	0.52	0.79	1.06
Treatment plant sampling and monitoring	0.00	0.15	0.15	0.15	0.15	0.00	0.15	0.15	0.15	0.15
Effluent pump station	0.52	0.52	0.52	0.52	0.52	0.52	0.52	0.52	0.52	0.52
Total Annual O&M Cost	1.69	3.14	4.21	5.38	6.63	1.54	2.99	4.13	5.28	6.42
Present Worth - Annual O&M Cost	36.40	67.42	90.36	115.55	142.41	33.11	64.13	88.76	113.38	138.00
Present Worth - Replacement Costs, $million										
Influent pump station	1.68	1.68	1.68	1.68	1.68	1.68	1.68	1.68	1.68	1.68
STA seepage pump station	0.15	0.15	0.15	0.15	0.15	0.08	0.08	0.08	0.08	0.08
FEB seepage pump station	0.00	0.00	0.00	0.00	0.00	0.00	0.00	0.00	0.00	0.00
Treatment plant influent pump station	0.00	0.08	0.16	0.28	0.65	0.00	0.08	0.17	0.33	0.76
Chemical feed system	0.00	0.16	0.22	0.29	0.53	0.00	0.17	0.22	0.32	0.59
Other major treatment plant equipment	0.00	1.87	2.48	3.33	5.97	0.00	1.88	2.55	3.66	6.74
Sludge treatment and disposal	0.00	0.14	0.28	0.43	0.58	0.00	0.14	0.29	0.43	0.58
Effluent pump station	1.68	1.68	1.68	1.68	1.68	1.68	1.68	1.68	1.68	1.68
Total Present Worth - Replacement Costs	3.50	5.75	6.63	7.82	11.22	3.43	5.70	6.67	8.17	12.10
Salvage Value, $ million										
Influent pump station demolition cost	(3.57)	(3.57)	(3.57)	(3.57)	(3.57)	(3.57)	(3.57)	(3.57)	(3.57)	(3.57)
STA seepage pump station demolition cost	(0.16)	(0.16)	(0.16)	(0.16)	(0.16)	(0.09)	(0.09)	(0.09)	(0.09)	(0.09)
FEB seepage pump station demolition cost	0.00	0.00	0.00	0.00	0.00	0.00	0.00	0.00	0.00	0.00
Treatment plant influent pump station demolition cost	0.00	(0.08)	(0.17)	(0.30)	(0.69)	0.00	(0.08)	(0.18)	(0.35)	(0.81)
Treatment plant demolition cost	0.00	(2.25)	(2.98)	(4.00)	(7.18)	0.00	(2.27)	(3.07)	(4.41)	(8.11)
Effluent pump station demolition cost	(3.57)	(3.57)	(3.57)	(3.57)	(3.57)	(3.57)	(3.57)	(3.57)	(3.57)	(3.57)
STA restoration cost	(4.08)	(4.08)	(4.08)	(4.08)	(4.08)	(3.01)	(3.01)	(3.01)	(3.01)	(3.01)
FEB restoration cost	0.00	0.00	0.00	0.00	0.00	0.00	0.00	0.00	0.00	0.00
Sludge land restoration cost	0.00	0.00	0.00	0.00	0.00	0.00	0.00	0.00	0.00	0.00
STA land value	28.53	28.53	28.53	28.53	28.53	15.55	15.55	15.55	15.55	15.55
FEB land value	0.00	0.00	0.00	0.00	0.00	0.00	0.00	0.00	0.00	0.00
Treatment plant land value	0.00	0.03	0.07	0.10	0.14	0.00	0.03	0.07	0.11	0.14
Sludge land value	0.00	0.00	0.00	0.00	0.00	0.00	0.00	0.00	0.00	0.00
Net Salvage Value	17.14	14.84	14.06	12.94	9.41	5.31	2.99	2.12	0.66	(3.47)
Present Worth - Salvage Value	2.41	2.09	1.98	1.82	1.32	0.75	0.42	0.30	0.09	(0.49)
50 - Year Present Worth, $ million										
Capital Cost	125.80	143.42	150.56	160.14	186.53	91.02	108.76	116.62	128.56	158.89
O&M Cost	36.40	67.42	90.36	115.55	142.41	33.11	64.13	88.76	113.38	138.00
Replacement Cost	3.50	5.75	6.63	7.82	11.22	3.43	5.70	6.67	8.17	12.10
Salvage Value	(2.41)	(2.09)	(1.98)	(1.82)	(1.32)	(0.75)	(0.42)	(0.30)	(0.09)	0.49
Total	163.28	214.50	245.58	281.69	338.83	126.81	178.17	211.74	250.02	309.47
Present worth, $/million gallons treated	47.34	62.19	71.20	81.67	98.23	36.77	51.65	61.39	72.48	89.72
Present worth, $/pound P removed	56.76	67.79	71.14	75.32	84.13	110.21	123.87	122.67	124.16	134.48

f:\3807\discount\pw-stadf.xls

Present Worth Calculations for STA - Chemical Treatment/Direct Filtration
(interest rate = 7.625%, discount rate = 0%, net = 7.625%)

Parameter	Influent/Effluent P Levels									
	150/50	150/40	150/30	150/20	150/10	90/50	90/40	90/30	90/20	90/10
Basis of Design										
Influent PS capacity, mgd	2330	2330	2330	2330	2330	2330	2330	2330	2330	2330
Influent PS average flow, mgd	189	189	189	189	189	189	189	189	189	189
STA area, acres	7410	7410	7410	7410	7410	4040	4040	4040	4040	4040
FEB area, acres	0	0	0	0	0	0	0	0	0	0
Treatment plant influent PS capacity, mgd	0	42	89	155	360	0	43	95	181	420
Treatment plant influent PS average flow, mgd	0	42	83	128	176	0	42	86	130	174
Treatment plant land area, acres	0	9	17	27	37	0	9	18	27	37
Sludge disposal area, acres	0	88	174	269	370	0	88	181	273	365
Effluent PS capacity, mgd	2330	2330	2330	2330	2330	2330	2330	2330	2330	2330
Effluent PS average flow, mgd	189	189	189	189	189	189	189	189	189	189
Total land area, acres	8,151	8,258	8,362	8,476	8,598	4,444	4,551	4,663	4,774	4,886
Capital Costs, $ million										
Influent pumping station	17.87	17.87	17.87	17.87	17.87	17.87	17.87	17.87	17.87	17.87
STA	33.96	33.96	33.96	33.96	33.96	18.52	18.52	18.52	18.52	18.52
STA seepage pump station	0.78	0.78	0.78	0.78	0.78	0.43	0.43	0.43	0.43	0.43
FEB	0.00	0.00	0.00	0.00	0.00	0.00	0.00	0.00	0.00	0.00
FEB seepage pump station	0.00	0.00	0.00	0.00	0.00	0.00	0.00	0.00	0.00	0.00
Treatment plant influent pump station	0.00	0.40	0.85	1.49	3.45	0.00	0.41	0.91	1.74	4.03
Treatment plant	0.00	11.26	14.90	20.01	35.90	0.00	11.33	15.36	22.03	40.55
Sludge treatment and disposal	0.00	0.84	1.66	2.56	3.52	0.00	0.84	1.72	2.60	3.48
Effluent pump station	17.87	17.87	17.87	17.87	17.87	17.87	17.87	17.87	17.87	17.87
Subtotal	70.49	82.98	87.90	94.55	113.36	54.68	67.27	72.68	81.05	102.74
Construction contingencies (20 percent)	14.10	16.60	17.58	18.91	22.67	10.94	13.45	14.54	16.21	20.55
Subtotal, construction costs	84.58	99.58	105.48	113.45	136.03	65.62	80.72	87.21	97.26	123.29
Engineering (15 percent)	12.69	14.94	15.82	17.02	20.40	9.84	12.11	13.08	14.59	18.49
Land purchase - STA	28.53	28.53	28.53	28.53	28.53	15.55	15.55	15.55	15.55	15.55
Land purchase - FEB	0.00	0.00	0.00	0.00	0.00	0.00	0.00	0.00	0.00	0.00
Land purchase - treatment plant	0.00	0.03	0.07	0.10	0.14	0.00	0.03	0.07	0.11	0.14
Land purchase - sludge disposal	0.00	0.34	0.67	1.03	1.42	0.00	0.34	0.70	1.05	1.41
Total Capital Cost	125.80	143.42	150.56	160.14	186.53	91.02	108.76	116.62	128.56	158.89
Present Worth - Capital Cost	125.80	143.42	150.56	160.14	186.53	91.02	108.76	116.62	128.56	158.89
O&M Costs, $ million/yr										
Influent pumping station	0.52	0.52	0.52	0.52	0.52	0.52	0.52	0.52	0.52	0.52
STA	0.22	0.22	0.22	0.22	0.22	0.12	0.12	0.12	0.12	0.12
STA seepage pump station	0.12	0.12	0.12	0.12	0.12	0.07	0.07	0.07	0.07	0.07
STA sampling and monitoring	0.30	0.30	0.30	0.30	0.30	0.30	0.30	0.30	0.30	0.30
FEB	0.00	0.00	0.00	0.00	0.00	0.00	0.00	0.00	0.00	0.00
FEB seepage pump station	0.00	0.00	0.00	0.00	0.00	0.00	0.00	0.00	0.00	0.00
Treatment plant influent pump station	0.00	0.26	0.32	0.38	0.45	0.00	0.26	0.32	0.38	0.44
Chemicals	0.00	0.73	1.44	2.23	3.06	0.00	0.73	1.50	2.26	3.03
Sludge treatment and disposal	0.00	0.05	0.10	0.15	0.20	0.00	0.05	0.10	0.15	0.20
Other treatment plant O&M	0.00	0.26	0.51	0.78	1.07	0.00	0.26	0.52	0.79	1.06
Treatment plant sampling and monitoring	0.00	0.15	0.15	0.15	0.15	0.00	0.15	0.15	0.15	0.15
Effluent pump station	0.52	0.52	0.52	0.52	0.52	0.52	0.52	0.52	0.52	0.52
Total Annual O&M Cost	1.69	3.14	4.21	5.38	6.63	1.54	2.99	4.13	5.28	6.42
Present Worth - Annual O&M Cost	21.66	40.11	53.77	68.75	84.73	19.70	38.16	52.81	67.46	82.11
Present Worth - Replacement Costs, $million										
Infuent pump station	0.71	0.71	0.71	0.71	0.71	0.71	0.71	0.71	0.71	0.71
STA seepage pump station	0.06	0.06	0.06	0.06	0.06	0.03	0.03	0.03	0.03	0.03
FEB seepage pump station	0.00	0.00	0.00	0.00	0.00	0.00	0.00	0.00	0.00	0.00
Treatment plant influent pump station	0.00	0.03	0.07	0.12	0.27	0.00	0.03	0.07	0.14	0.32
Chemical feed system	0.00	0.12	0.16	0.22	0.39	0.00	0.12	0.17	0.24	0.44
Other major treatment plant equipment	0.00	0.80	1.05	1.42	2.54	0.00	0.80	1.09	1.56	2.87
Sludge treatment and disposal	0.00	0.06	0.12	0.18	0.25	0.00	0.06	0.12	0.18	0.25
Effluent pump station	0.71	0.71	0.71	0.71	0.71	0.71	0.71	0.71	0.71	0.71
Total Present Worth - Replacement Costs	1.49	2.50	2.89	3.42	4.94	1.46	2.47	2.91	3.58	5.33
Salvage Value, $ million										
Influent pump station demolition cost	(3.57)	(3.57)	(3.57)	(3.57)	(3.57)	(3.57)	(3.57)	(3.57)	(3.57)	(3.57)
STA seepage pump station demolition cost	(0.16)	(0.16)	(0.16)	(0.16)	(0.16)	(0.09)	(0.09)	(0.09)	(0.09)	(0.09)
FEB seepage pump station demolition cost	0.00	0.00	0.00	0.00	0.00	0.00	0.00	0.00	0.00	0.00
Treatment plant influent pump station demolition cost	0.00	(0.08)	(0.17)	(0.30)	(0.69)	0.00	(0.08)	(0.18)	(0.35)	(0.81)
Treatment plant demolition cost	0.00	(2.25)	(2.98)	(4.00)	(7.18)	0.00	(2.27)	(3.07)	(4.41)	(8.11)
Effluent pump station demolition cost	(3.57)	(3.57)	(3.57)	(3.57)	(3.57)	(3.57)	(3.57)	(3.57)	(3.57)	(3.57)
STA restoration cost	(4.08)	(4.08)	(4.08)	(4.08)	(4.08)	(3.01)	(3.01)	(3.01)	(3.01)	(3.01)
FEB restoration cost	0.00	0.00	0.00	0.00	0.00	0.00	0.00	0.00	0.00	0.00
Sludge land restoration cost	0.00	0.00	0.00	0.00	0.00	0.00	0.00	0.00	0.00	0.00
STA land value	28.53	28.53	28.53	28.53	28.53	15.55	15.55	15.55	15.55	15.55
FEB land value	0.00	0.00	0.00	0.00	0.00	0.00	0.00	0.00	0.00	0.00
Treatment plant land value	0.00	0.03	0.07	0.10	0.14	0.00	0.03	0.07	0.11	0.14
Sludge land value	0.00	0.00	0.00	0.00	0.00	0.00	0.00	0.00	0.00	0.00
Net Salvage Value	17.14	14.84	14.06	12.94	9.41	5.31	2.99	2.12	0.66	(3.47)
Present Worth - Salvage Value	0.43	0.38	0.36	0.33	0.24	0.13	0.08	0.05	0.02	(0.09)
50 - Year Present Worth, $ million										
Capital Cost	125.80	143.42	150.56	160.14	186.53	91.02	108.76	116.62	128.56	158.89
O&M Cost	21.66	40.11	53.77	68.75	84.73	19.70	38.16	52.81	67.46	82.11
Replacement Cost	1.49	2.50	2.89	3.42	4.94	1.46	2.47	2.91	3.58	5.33
Salvage Value	(0.43)	(0.38)	(0.36)	(0.33)	(0.24)	(0.13)	(0.08)	(0.05)	(0.02)	0.09
Total	148.51	185.65	206.86	231.98	275.96	112.04	149.32	172.28	199.58	246.42
Present worth, $/million gallons treated	43.05	53.82	59.97	67.26	80.01	32.48	43.29	49.95	57.86	71.44
Present worth, $/pound P removed	51.62	58.67	59.92	62.03	68.52	97.37	103.81	99.81	99.11	107.08

f:\3807\discount\c2-stadf.xls

Present Worth Calculations for Chemical Treatment/Direct Filtration
(interest rate = 6.8%, discount rate = 2.8%, net = 4.0%)

Parameter	Influent/Effluent P Levels									
	150/50	150/40	150/30	150/20	150/10	90/50	90/40	90/30	90/20	90/10
Basis of Design										
Influent PS capacity, mgd	2330	2330	2330	2330	2330	2330	2330	2330	2330	2330
Influent PS average flow, mgd	189	189	189	189	189	189	189	189	189	189
STA area, acres	0	0	0	0	0	0	0	0	0	0
FEB area, acres	500	500	1000	1500	2500	200	300	500	800	1500
Treatment plant influent PS capacity, mgd	251	327	360	448	710	127	187	263	370	615
Treatment plant influent PS average flow, mgd	128	143	158	173	189	79	105	130	156	182
Treatment plant land area, acres	27	30	33	36	40	17	22	27	33	38
Sludge disposal area, acres	269	300	332	363	397	166	221	273	328	382
Effluent PS capacity, mgd	2330	2330	2330	2330	2330	2330	2330	2330	2330	2330
Effluent PS average flow, mgd	189	189	189	189	189	189	189	189	189	189
Total land area, acres	875	913	1,501	2,090	3,230	421	597	880	1,276	2,112
Capital Costs, $ million										
Influent pumping station	17.87	17.87	17.87	17.87	17.87	17.87	17.87	17.87	17.87	17.87
STA	0.00	0.00	0.00	0.00	0.00	0.00	0.00	0.00	0.00	0.00
STA seepage pump station	0.00	0.00	0.00	0.00	0.00	0.00	0.00	0.00	0.00	0.00
FEB	4.13	4.13	8.25	12.38	20.63	1.65	2.48	4.13	6.60	12.38
FEB seepage pump station	0.11	0.11	0.21	0.32	0.53	0.04	0.06	0.11	0.17	0.32
Treatment plant influent pump station	2.41	3.14	3.45	4.30	6.81	1.22	1.79	2.52	3.55	5.90
Treatment plant	27.45	33.34	35.90	42.72	63.03	17.84	22.49	28.39	36.68	55.66
Sludge treatment and disposal	2.56	2.86	3.16	3.46	3.78	1.58	2.10	2.60	3.12	3.64
Effluent pump station	17.87	17.87	17.87	17.87	17.87	17.87	17.87	17.87	17.87	17.87
Subtotal	72.39	79.31	86.72	98.91	130.51	58.07	64.67	73.48	85.85	113.63
Construction contingencies (20 percent)	14.48	15.86	17.34	19.78	26.10	11.61	12.93	14.70	17.17	22.73
Subtotal, construction costs	86.87	95.17	104.06	118.69	156.61	69.69	77.60	88.17	103.03	136.36
Engineering (15 percent)	13.03	14.28	15.61	17.80	23.49	10.45	11.64	13.23	15.45	20.45
Land purchase - STA	0.00	0.00	0.00	0.00	0.00	0.00	0.00	0.00	0.00	0.00
Land purchase - FEB	1.93	1.93	3.85	5.78	9.63	0.77	1.16	1.93	3.08	5.78
Land purchase - treatment plant	0.10	0.12	0.13	0.14	0.15	0.06	0.08	0.11	0.13	0.15
Land purchase - sludge disposal	1.03	1.16	1.28	1.40	1.53	0.64	0.85	1.05	1.26	1.47
Total Capital Cost	102.97	112.65	124.92	143.81	191.41	81.62	91.33	104.48	122.95	164.21
Present Worth - Capital Cost	102.97	112.65	124.92	143.81	191.41	81.62	91.33	104.48	122.95	164.21
O&M Costs, $ million/yr										
Influent pumping station	0.52	0.52	0.52	0.52	0.52	0.52	0.52	0.52	0.52	0.52
STA	0.00	0.00	0.00	0.00	0.00	0.00	0.00	0.00	0.00	0.00
STA seepage pump station	0.00	0.00	0.00	0.00	0.00	0.00	0.00	0.00	0.00	0.00
STA sampling and monitoring	0.00	0.00	0.00	0.00	0.00	0.00	0.00	0.00	0.00	0.00
FEB	0.03	0.03	0.06	0.09	0.15	0.01	0.02	0.03	0.05	0.09
FEB seepage pump station	0.02	0.02	0.03	0.05	0.07	0.01	0.02	0.02	0.03	0.05
Treatment plant influent pump station	0.38	0.40	0.42	0.44	0.47	0.31	0.35	0.38	0.42	0.46
Chemicals	2.23	2.49	2.75	3.01	3.29	1.37	1.83	2.26	2.71	3.17
Sludge treatment and disposal	0.15	0.17	0.18	0.20	0.22	0.09	0.12	0.15	0.18	0.21
Other treatment plant O&M	0.79	0.87	0.95	1.03	1.11	0.52	0.66	0.80	0.94	1.08
Treatment plant sampling and monitoring	0.30	0.30	0.30	0.30	0.30	0.30	0.30	0.30	0.30	0.30
Effluent pump station	0.52	0.52	0.52	0.52	0.52	0.52	0.52	0.52	0.52	0.52
Total Annual O&M Cost	4.94	5.32	5.74	6.16	6.65	3.67	4.34	4.99	5.67	6.39
Present Worth - Annual O&M Cost	106.11	114.26	123.32	132.37	142.87	78.93	93.24	107.20	121.87	137.27
Present Worth - Replacement Costs, $million										
Influent pump station	1.68	1.68	1.68	1.68	1.68	1.68	1.68	1.68	1.68	1.68
STA seepage pump station	0.00	0.00	0.00	0.00	0.00	0.00	0.00	0.00	0.00	0.00
FEB seepage pump station	0.02	0.02	0.04	0.06	0.10	0.01	0.01	0.02	0.03	0.06
Treatment plant influent pump station	0.45	0.59	0.65	0.81	1.28	0.23	0.34	0.47	0.67	1.11
Chemical feed system	0.40	0.49	0.53	0.63	0.92	0.26	0.33	0.42	0.54	0.81
Other major treatment plant equipment	4.56	5.54	5.97	7.10	10.47	2.96	3.74	4.72	6.09	9.25
Sludge treatment and disposal	0.43	0.48	0.53	0.57	0.63	0.26	0.35	0.43	0.52	0.60
Effluent pump station	1.00	1.00	1.68	1.68	1.68	1.68	1.68	1.68	1.68	1.68
Total Present Worth - Replacement Costs	9.21	10.46	11.06	12.52	16.75	7.08	8.12	9.41	11.20	15.19
Salvage Value, $ million										
Influent pump station demolition cost	(3.57)	(3.57)	(3.57)	(3.57)	(3.57)	(3.57)	(3.57)	(3.57)	(3.57)	(3.57)
STA seepage pump station demolition cost	0.00	0.00	0.00	0.00	0.00	0.00	0.00	0.00	0.00	0.00
FEB seepage pump station demolition cost	(0.02)	(0.02)	(0.04)	(0.06)	(0.11)	(0.01)	(0.01)	(0.02)	(0.03)	(0.06)
Treatment plant influent pump station demolition cost	(0.48)	(0.63)	(0.69)	(0.86)	(1.36)	(0.24)	(0.36)	(0.50)	(0.71)	(1.18)
Treatment plant demolition cost	(5.49)	(6.67)	(7.18)	(8.54)	(12.61)	(3.57)	(4.50)	(5.68)	(7.34)	(11.13)
Effluent pump station demolition cost	(3.57)	(3.57)	(3.57)	(3.57)	(3.57)	(3.57)	(3.57)	(3.57)	(3.57)	(3.57)
STA restoration cost	0.00	0.00	0.00	0.00	0.00	0.00	0.00	0.00	0.00	0.00
FEB restoration cost	(1.41)	(1.41)	(2.00)	(2.45)	(3.16)	(0.89)	(1.10)	(1.41)	(1.79)	(2.45)
Sludge land restoration cost	0.00	0.00	0.00	0.00	0.00	0.00	0.00	0.00	0.00	0.00
STA land value	0.00	0.00	0.00	0.00	0.00	0.00	0.00	0.00	0.00	0.00
FEB land value	1.93	1.93	3.85	5.78	9.63	0.77	1.16	1.93	3.08	5.78
Treatment plant land value	0.10	0.12	0.13	0.14	0.15	0.06	0.08	0.11	0.13	0.15
Sludge land value	0.00	0.00	0.00	0.00	0.00	0.00	0.00	0.00	0.00	0.00
Net Salvage Value	(12.53)	(13.84)	(13.08)	(13.15)	(14.61)	(11.03)	(11.87)	(12.73)	(13.81)	(16.05)
Present Worth - Salvage Value	(1.76)	(1.95)	(1.84)	(1.85)	(2.06)	(1.55)	(1.67)	(1.79)	(1.94)	(2.26)
50 - Year Present Worth, $ million										
Capital Cost	102.97	112.65	124.92	143.81	191.41	81.62	91.33	104.48	122.95	164.21
O&M Cost	106.11	114.26	123.32	132.37	142.87	78.93	93.24	107.20	121.87	137.27
Replacement Cost	9.21	10.46	11.06	12.52	16.75	7.08	8.12	9.41	11.20	15.19
Salvage Value	1.76	1.95	1.84	1.85	2.06	1.55	1.67	1.79	1.94	2.26
Total	220.05	239.32	261.14	290.55	353.08	169.17	194.36	222.88	257.96	318.92
Present worth, $/million gallons treated	63.80	69.38	75.71	84.24	102.37	49.05	56.35	64.62	74.79	92.46
Present worth, $/pound P removed	76.49	75.63	75.65	77.69	87.67	147.02	135.13	129.13	128.10	138.58

Present Worth Calculations for Chemical Treatment/Direct Filtration
(interest rate = 7.625%, discount rate = 0%, net = 7.625%)

Parameter	Influent/Effluent P Levels									
	150/50	150/40	150/30	150/20	150/10	90/50	90/40	90/30	90/20	90/10
Basis of Design										
Influent PS capacity, mgd	2330	2330	2330	2330	2330	2330	2330	2330	2330	2330
Influent PS average flow, mgd	189	189	189	189	189	189	189	189	189	189
STA area, acres	0	0	0	0	0	0	0	0	0	0
FEB area, acres	500	500	1000	1500	2500	200	300	500	800	1500
Treatment plant influent PS capacity, mgd	251	327	360	448	710	127	187	263	370	615
Treatment plant influent PS average flow, mgd	128	143	158	173	189	79	105	130	156	182
Treatment plant land area, acres	27	30	33	36	40	17	22	27	33	38
Sludge disposal area, acres	269	300	332	363	397	166	221	273	328	382
Effluent PS capacity, mgd	2330	2330	2330	2330	2330	2330	2330	2330	2330	2330
Effluent PS average flow, mgd	189	189	189	189	189	189	189	189	189	189
Total land area, acres	875	913	1,501	2,090	3,230	421	597	880	1,276	2,112
Capital Costs, $ million										
Influent pumping station	17.87	17.87	17.87	17.87	17.87	17.87	17.87	17.87	17.87	17.87
STA	0.00	0.00	0.00	0.00	0.00	0.00	0.00	0.00	0.00	0.00
STA seepage pump station	0.00	0.00	0.00	0.00	0.00	0.00	0.00	0.00	0.00	0.00
FEB	4.13	4.13	8.25	12.38	20.63	1.65	2.48	4.13	6.60	12.38
FEB seepage pump station	0.11	0.11	0.21	0.32	0.53	0.04	0.06	0.11	0.17	0.32
Treatment plant influent pump station	2.41	3.14	3.45	4.30	6.81	1.22	1.79	2.52	3.55	5.90
Treatment plant	27.45	33.34	35.90	42.72	63.03	17.84	22.49	28.38	36.68	55.66
Sludge treatment and disposal	2.56	2.86	3.16	3.46	3.78	1.58	2.10	2.60	3.12	3.64
Effluent pump station	17.87	17.87	17.87	17.87	17.87	17.87	17.87	17.87	17.87	17.87
Subtotal	72.39	79.31	86.72	98.91	130.51	58.07	64.67	73.48	85.85	113.63
Construction contingencies (20 percent)	14.48	15.86	17.34	19.78	26.10	11.61	12.93	14.70	17.17	22.73
Subtotal, construction costs	86.87	95.17	104.06	118.69	156.61	69.69	77.60	88.17	103.03	136.36
Engineering (15 percent)	13.03	14.28	15.61	17.80	23.49	10.45	11.64	13.23	15.45	20.45
Land purchase - STA	0.00	0.00	0.00	0.00	0.00	0.00	0.00	0.00	0.00	0.00
Land purchase - FEB	1.93	1.93	3.85	5.78	9.63	0.77	1.16	1.93	3.08	5.78
Land purchase - treatment plant	0.10	0.12	0.13	0.14	0.15	0.06	0.08	0.11	0.13	0.15
Land purchase - sludge disposal	1.03	1.16	1.28	1.40	1.53	0.64	0.85	1.05	1.26	1.47
Total Capital Cost	102.97	112.65	124.92	143.81	191.41	81.62	91.33	104.48	122.95	164.21
Present Worth - Capital Cost	102.97	112.65	124.92	143.81	191.41	81.62	91.33	104.48	122.95	164.21
O&M Costs, $ million/yr										
Influent pumping station	0.52	0.52	0.52	0.52	0.52	0.52	0.52	0.52	0.52	0.52
STA	0.00	0.00	0.00	0.00	0.00	0.00	0.00	0.00	0.00	0.00
STA seepage pump station	0.00	0.00	0.00	0.00	0.00	0.00	0.00	0.00	0.00	0.00
STA sampling and monitoring	0.00	0.00	0.00	0.00	0.00	0.00	0.00	0.00	0.00	0.00
FEB	0.03	0.03	0.06	0.09	0.15	0.01	0.02	0.03	0.05	0.09
FEB seepage pump station	0.02	0.02	0.03	0.05	0.07	0.01	0.02	0.02	0.03	0.05
Treatment plant influent pump station	0.38	0.40	0.42	0.44	0.47	0.31	0.35	0.38	0.42	0.46
Chemicals	2.23	2.49	2.75	3.01	3.29	1.37	1.83	2.26	2.71	3.17
Sludge treatment and disposal	0.15	0.17	0.18	0.20	0.22	0.09	0.12	0.15	0.18	0.21
Other treatment plant O&M	0.79	0.87	0.95	1.03	1.11	0.52	0.66	0.80	0.94	1.08
Treatment plant sampling and monitoring	0.30	0.30	0.30	0.30	0.30	0.30	0.30	0.30	0.30	0.30
Effluent pump station	0.52	0.52	0.52	0.52	0.52	0.52	0.52	0.52	0.52	0.52
Total Annual O&M Cost	4.94	5.32	5.74	6.16	6.65	3.67	4.34	4.99	5.67	6.39
Present Worth - Annual O&M Cost	63.13	67.99	73.37	78.76	85.01	46.96	55.48	63.78	72.51	81.67
Present Worth - Replacement Costs, $million										
Influent pump station	0.71	0.71	0.71	0.71	0.71	0.71	0.71	0.71	0.71	0.71
STA seepage pump station	0.00	0.00	0.00	0.00	0.00	0.00	0.00	0.00	0.00	0.00
FEB seepage pump station	0.01	0.01	0.02	0.03	0.04	0.00	0.01	0.01	0.01	0.03
Treatment plant influent pump station	0.19	0.25	0.27	0.34	0.54	0.10	0.14	0.20	0.28	0.47
Chemical feed system	0.30	0.36	0.39	0.47	0.69	0.19	0.25	0.31	0.40	0.61
Other major treatment plant equipment	1.94	2.36	2.54	3.02	4.46	1.26	1.59	2.01	2.59	3.94
Sludge treatment and disposal	0.18	0.20	0.22	0.24	0.27	0.11	0.15	0.18	0.22	0.26
Effluent pump station	0.71	0.71	0.71	0.71	0.71	0.71	0.71	0.71	0.71	0.71
Total Present Worth - Replacement Costs	4.05	4.61	4.87	5.52	7.42	3.09	3.56	4.13	4.93	6.72
Salvage Value, $ million										
Influent pump station demolition cost	(3.57)	(3.57)	(3.57)	(3.57)	(3.57)	(3.57)	(3.57)	(3.57)	(3.57)	(3.57)
STA seepage pump station demolition cost	0.00	0.00	0.00	0.00	0.00	0.00	0.00	0.00	0.00	0.00
FEB seepage pump station demolition cost	(0.02)	(0.02)	(0.04)	(0.06)	(0.11)	(0.01)	(0.01)	(0.02)	(0.03)	(0.06)
Treatment plant influent pump station demolition cost	(0.48)	(0.63)	(0.69)	(0.86)	(1.36)	(0.24)	(0.36)	(0.50)	(0.71)	(1.18)
Treatment plant demolition cost	(5.49)	(6.67)	(7.18)	(8.54)	(12.61)	(3.57)	(4.50)	(5.68)	(7.34)	(11.13)
Effluent pump station demolition cost	(3.57)	(3.57)	(3.57)	(3.57)	(3.57)	(3.57)	(3.57)	(3.57)	(3.57)	(3.57)
STA restoration cost	0.00	0.00	0.00	0.00	0.00	0.00	0.00	0.00	0.00	0.00
FEB restoration cost	(1.41)	(1.41)	(2.00)	(2.45)	(3.16)	(0.89)	(1.10)	(1.41)	(1.79)	(2.45)
Sludge land restoration cost	0.00	0.00	0.00	0.00	0.00	0.00	0.00	0.00	0.00	0.00
STA land value	0.00	0.00	0.00	0.00	0.00	0.00	0.00	0.00	0.00	0.00
FEB land value	1.93	1.93	3.85	5.78	9.63	0.77	1.16	1.93	3.08	5.78
Treatment plant land value	0.10	0.12	0.13	0.14	0.15	0.06	0.08	0.11	0.13	0.15
Sludge land value	0.00	0.00	0.00	0.00	0.00	0.00	0.00	0.00	0.00	0.00
Net Salvage Value	(12.53)	(13.84)	(13.08)	(13.15)	(14.61)	(11.03)	(11.87)	(12.73)	(13.81)	(16.05)
Present Worth - Salvage Value	(0.32)	(0.35)	(0.33)	(0.33)	(0.37)	(0.28)	(0.30)	(0.32)	(0.35)	(0.41)
50 - Year Present Worth, $ million										
Capital Cost	102.97	112.65	124.92	143.81	191.41	81.62	91.33	104.48	122.95	164.21
O&M Cost	63.13	67.99	73.37	78.76	85.01	46.96	55.48	63.78	72.51	81.67
Replacement Cost	4.05	4.61	4.87	5.52	7.42	3.09	3.56	4.13	4.93	6.72
Salvage Value	0.32	0.35	0.33	0.33	0.37	0.28	0.30	0.32	0.35	0.41
Total	170.46	185.59	203.50	228.43	284.21	131.95	150.67	172.72	200.75	253.01
Present worth, $/million gallons treated	49.42	53.81	59.00	66.23	82.40	38.25	43.68	50.07	58.20	73.35
Present worth, $/pound P removed	59.26	58.65	58.95	61.08	70.57	114.67	104.75	100.07	99.69	109.94

t:\3807\discount\c2-cf.xls

APPENDIX I

SALVAGE VALUE SENSITIVITY ANALYSIS

Present Worth Calculations for Stormwater Treatment Areas (STAs)
(Salvage Value = 0)

Parameter	Influent/Effluent P Levels									
	150/50	150/40	150/30	150/20	150/10	90/50	90/40	90/30	90/20	90/10
Basis of Design										
Influent PS capacity, mgd	2330	2330	2330	0	0	2330	2330	2330	0	0
Influent PS average flow, mgd	189	189	189	0	0	189	189	189	0	0
STA area, acres	7410	8965	11020	0	0	4040	5620	7695	0	0
FEB area, acres	0	0	0	0	0	0	0	0	0	0
Treatment plant influent PS capacity, mgd	0	0	0	0	0	0	0	0	0	0
Treatment plant influent PS average flow, mgd	0	0	0	0	0	0	0	0	0	0
Treatment plant land area, acres	0	0	0	0	0	0	0	0	0	0
Sludge disposal area, acres	0	0	0	0	0	0	0	0	0	0
Effluent PS capacity, mgd	2330	2330	2330	0	0	2330	2330	2330	0	0
Effluent PS average flow, mgd	189	189	189	0	0	189	189	189	0	0
Total land area, acres	8151	9861.5	12122	0	0	4444	6182	8464.5	0	0
Capital Costs, $ million										
Influent pumping station	17.87	17.87	17.87	0.00	0.00	17.87	17.87	17.87	0.00	0.00
STA	33.96	41.09	50.50	0.00	0.00	18.52	25.76	35.27	0.00	0.00
STA seepage pump station	0.78	0.95	1.17	0.00	0.00	0.43	0.59	0.81	0.00	0.00
FEB	0.00	0.00	0.00	0.00	0.00	0.00	0.00	0.00	0.00	0.00
FEB seepage pump station	0.00	0.00	0.00	0.00	0.00	0.00	0.00	0.00	0.00	0.00
Treatment plant influent pump station	0.00	0.00	0.00	0.00	0.00	0.00	0.00	0.00	0.00	0.00
Treatment plant	0.00	0.00	0.00	0.00	0.00	0.00	0.00	0.00	0.00	0.00
Sludge treatment and disposal	0.00	0.00	0.00	0.00	0.00	0.00	0.00	0.00	0.00	0.00
Effluent pump station	17.87	17.87	17.87	0.00	0.00	17.87	17.87	17.87	0.00	0.00
Subtotal	70.49	77.78	87.41	0.00	0.00	54.68	62.09	71.82	0.00	0.00
Construction contingencies (20 percent)	14.10	15.56	17.48	0.00	0.00	10.94	12.42	14.36	0.00	0.00
Subtotal, construction costs	84.58	93.33	104.90	0.00	0.00	65.62	74.51	86.19	0.00	0.00
Engineering (15 percent)	12.69	14.00	15.73	0.00	0.00	9.84	11.18	12.93	0.00	0.00
Land purchase - STA	28.53	34.52	42.43	0.00	0.00	15.55	21.64	29.63	0.00	0.00
Land purchase - FEB	0.00	0.00	0.00	0.00	0.00	0.00	0.00	0.00	0.00	0.00
Land purchase - treatment plant	0.00	0.00	0.00	0.00	0.00	0.00	0.00	0.00	0.00	0.00
Land purchase - sludge disposal	0.00	0.00	0.00	0.00	0.00	0.00	0.00	0.00	0.00	0.00
Total Capital Cost	125.80	141.85	163.06	0.00	0.00	91.02	107.33	128.74	0.00	0.00
Present Worth - Capital Cost	125.80	141.85	163.06	0.00	0.00	91.02	107.33	128.74	0.00	0.00
O&M Costs, $ million/yr										
Influent pumping station	0.52	0.52	0.52	0.00	0.00	0.52	0.52	0.52	0.00	0.00
STA	0.22	0.27	0.33	0.00	0.00	0.12	0.17	0.23	0.00	0.00
STA seepage pump station	0.12	0.15	0.18	0.00	0.00	0.07	0.10	0.13	0.00	0.00
STA sampling and monitoring	0.30	0.30	0.30	0.00	0.00	0.30	0.30	0.30	0.00	0.00
FEB	0.00	0.00	0.00	0.00	0.00	0.00	0.00	0.00	0.00	0.00
FEB seepage pump station	0.00	0.00	0.00	0.00	0.00	0.00	0.00	0.00	0.00	0.00
Treatment plant influent pump station	0.00	0.00	0.00	0.00	0.00	0.00	0.00	0.00	0.00	0.00
Chemicals	0.00	0.00	0.00	0.00	0.00	0.00	0.00	0.00	0.00	0.00
Sludge treatment and disposal	0.00	0.00	0.00	0.00	0.00	0.00	0.00	0.00	0.00	0.00
Other treatment plant O&M	0.00	0.00	0.00	0.00	0.00	0.00	0.00	0.00	0.00	0.00
Treatment plant sampling and monitoring	0.00	0.00	0.00	0.00	0.00	0.00	0.00	0.00	0.00	0.00
Effluent pump station	0.52	0.52	0.52	0.00	0.00	0.52	0.52	0.52	0.00	0.00
Total Annual O&M Cost	1.69	1.76	1.86	0.00	0.00	1.54	1.61	1.71	0.00	0.00
Present Worth - Annual O&M Cost	36.40	37.91	39.92	0.00	0.00	33.11	34.65	36.67	0.00	0.00
Present Worth - Replacement Costs, $million										
Influent pump station	1.68	1.68	1.68	0.00	0.00	1.68	1.68	1.68	0.00	0.00
STA seepage pump station	0.15	0.18	0.22	0.00	0.00	0.08	0.11	0.15	0.00	0.00
FEB seepage pump station	0.00	0.00	0.00	0.00	0.00	0.00	0.00	0.00	0.00	0.00
Treatment plant influent pump station	0.00	0.00	0.00	0.00	0.00	0.00	0.00	0.00	0.00	0.00
Chemical feed system	0.00	0.00	0.00	0.00	0.00	0.00	0.00	0.00	0.00	0.00
Other major treatment plant equipment	0.00	0.00	0.00	0.00	0.00	0.00	0.00	0.00	0.00	0.00
Sludge treatment and disposal	0.00	0.00	0.00	0.00	0.00	0.00	0.00	0.00	0.00	0.00
Effluent pump station	1.68	1.68	1.68	0.00	0.00	1.68	1.68	1.68	0.00	0.00
Total Present Worth - Replacement Costs	3.50	3.53	3.57	0.00	0.00	3.43	3.46	3.50	0.00	0.00
Salvage Value, $ million										
Influent pump station demolition cost	(3.57)	(3.57)	(3.57)	0.00	0.00	(3.57)	(3.57)	(3.57)	0.00	0.00
STA seepage pump station demolition cost	(0.16)	(0.19)	(0.23)	0.00	0.00	(0.09)	(0.12)	(0.16)	0.00	0.00
FEB seepage pump station demolition cost	0.00	0.00	0.00	0.00	0.00	0.00	0.00	0.00	0.00	0.00
Treatment plant influent pump station demolition cost	0.00	0.00	0.00	0.00	0.00	0.00	0.00	0.00	0.00	0.00
Treatment plant demolition cost	0.00	0.00	0.00	0.00	0.00	0.00	0.00	0.00	0.00	0.00
Effluent pump station demolition cost	(3.57)	(3.57)	(3.57)	0.00	0.00	(3.57)	(3.57)	(3.57)	0.00	0.00
STA restoration cost	(4.08)	(4.49)	(4.98)	0.00	0.00	(3.01)	(3.56)	(4.16)	0.00	0.00
FEB restoration cost	0.00	0.00	0.00	0.00	0.00	0.00	0.00	0.00	0.00	0.00
Sludge land restoration cost	0.00	0.00	0.00	0.00	0.00	0.00	0.00	0.00	0.00	0.00
STA land value	0.00	0.00	0.00	0.00	0.00	0.00	0.00	0.00	0.00	0.00
FEB land value	0.00	0.00	0.00	0.00	0.00	0.00	0.00	0.00	0.00	0.00
Treatment plant land value	0.00	0.00	0.00	0.00	0.00	0.00	0.00	0.00	0.00	0.00
Sludge land value	0.00	0.00	0.00	0.00	0.00	0.00	0.00	0.00	0.00	0.00
Net Salvage Value	(11.39)	(11.83)	(12.36)	0.00	0.00	(10.25)	(10.82)	(11.47)	0.00	0.00
Present Worth - Salvage Value	(1.60)	(1.66)	(1.74)	0.00	0.00	(1.44)	(1.52)	(1.61)	0.00	0.00
50 - Year Present Worth, $ million										
Capital Cost	125.80	141.85	163.06	0.00	0.00	91.02	107.33	128.74	0.00	0.00
O&M Cost	36.40	37.91	39.92	0.00	0.00	33.11	34.65	36.67	0.00	0.00
Replacement Cost	3.50	3.53	3.57	0.00	0.00	3.43	3.46	3.50	0.00	0.00
Salvage Value	1.60	1.66	1.74	0.00	0.00	1.44	1.52	1.61	0.00	0.00
Total	167.30	184.95	208.28	0.00	0.00	129.00	146.96	170.53	0.00	0.00
Present worth, $/million gallons treated	48.50	53.62	60.39	0.00	0.00	37.40	42.61	49.44	0.00	0.00
Present worth, $/pound P removed	58.16	58.45	60.34	0.00	0.00	112.11	102.18	98.80	0.00	0.00

t:\3807\salvage\STA0.xls

Present Worth Calculations for Stormwater Treatment Areas (STAs)
(Salvage Value = purchase price)

Parameter	Influent/Effluent P Levels									
	150/50	150/40	150/30	150/20	150/10	90/50	90/40	90/30	90/20	90/10
Basis of Design										
Influent PS capacity, mgd	2330	2330	2330	0	0	2330	2330	2330	0	0
Influent PS average flow, mgd	189	189	189	0	0	189	189	189	0	0
STA area, acres	7410	8965	11020	0	0	4040	5620	7695	0	0
FEB area, acres	0	0	0	0	0	0	0	0	0	0
Treatment plant influent PS capacity, mgd	0	0	0	0	0	0	0	0	0	0
Treatment plant influent PS average flow, mgd	0	0	0	0	0	0	0	0	0	0
Treatment plant land area, acres	0	0	0	0	0	0	0	0	0	0
Sludge disposal area, acres	0	0	0	0	0	0	0	0	0	0
Effluent PS capacity, mgd	2330	2330	2330	0	0	2330	2330	2330	0	0
Effluent PS average flow, mgd	189	189	189	0	0	189	189	189	0	0
Total land area, acres	8151	9861.5	12122	0	0	4444	6182	8464.5	0	0
Capital Costs, $ million										
Influent pumping station	17.87	17.87	17.87	0.00	0.00	17.87	17.87	17.87	0.00	0.00
STA	33.96	41.09	50.50	0.00	0.00	18.52	25.76	35.27	0.00	0.00
STA seepage pump station	0.78	0.95	1.17	0.00	0.00	0.43	0.59	0.81	0.00	0.00
FEB	0.00	0.00	0.00	0.00	0.00	0.00	0.00	0.00	0.00	0.00
FEB seepage pump station	0.00	0.00	0.00	0.00	0.00	0.00	0.00	0.00	0.00	0.00
Treatment plant influent pump station	0.00	0.00	0.00	0.00	0.00	0.00	0.00	0.00	0.00	0.00
Treatment plant	0.00	0.00	0.00	0.00	0.00	0.00	0.00	0.00	0.00	0.00
Sludge treatment and disposal	0.00	0.00	0.00	0.00	0.00	0.00	0.00	0.00	0.00	0.00
Effluent pump station	17.87	17.87	17.87	0.00	0.00	17.87	17.87	17.87	0.00	0.00
Subtotal	70.49	77.78	87.41	0.00	0.00	54.68	62.09	71.82	0.00	0.00
Construction contingencies (20 percent)	14.10	15.56	17.48	0.00	0.00	10.94	12.42	14.36	0.00	0.00
Subtotal, construction costs	84.59	93.33	104.90	0.00	0.00	65.62	74.51	86.19	0.00	0.00
Engineering (15 percent)	12.69	14.00	15.73	0.00	0.00	9.84	11.18	12.93	0.00	0.00
Land purchase - STA	28.53	34.52	42.43	0.00	0.00	15.55	21.64	29.63	0.00	0.00
Land purchase - FEB	0.00	0.00	0.00	0.00	0.00	0.00	0.00	0.00	0.00	0.00
Land purchase - treatment plant	0.00	0.00	0.00	0.00	0.00	0.00	0.00	0.00	0.00	0.00
Land purchase - sludge disposal	0.00	0.00	0.00	0.00	0.00	0.00	0.00	0.00	0.00	0.00
Total Capital Cost	125.80	141.85	163.06	0.00	0.00	91.02	107.33	128.74	0.00	0.00
Present Worth - Capital Cost	125.80	141.85	163.06	0.00	0.00	91.02	107.33	128.74	0.00	0.00
O&M Costs, $ million/yr										
Influent pumping station	0.52	0.52	0.52	0.00	0.00	0.52	0.52	0.52	0.00	0.00
STA	0.22	0.27	0.33	0.00	0.00	0.12	0.17	0.23	0.00	0.00
STA seepage pump station	0.12	0.15	0.18	0.00	0.00	0.07	0.10	0.13	0.00	0.00
STA sampling and monitoring	0.30	0.30	0.30	0.00	0.00	0.30	0.30	0.30	0.00	0.00
FEB	0.00	0.00	0.00	0.00	0.00	0.00	0.00	0.00	0.00	0.00
FEB seepage pump station	0.00	0.00	0.00	0.00	0.00	0.00	0.00	0.00	0.00	0.00
Treatment plant influent pump station	0.00	0.00	0.00	0.00	0.00	0.00	0.00	0.00	0.00	0.00
Chemicals	0.00	0.00	0.00	0.00	0.00	0.00	0.00	0.00	0.00	0.00
Sludge treatment and disposal	0.00	0.00	0.00	0.00	0.00	0.00	0.00	0.00	0.00	0.00
Other treatment plant O&M	0.00	0.00	0.00	0.00	0.00	0.00	0.00	0.00	0.00	0.00
Treatment plant sampling and monitoring	0.00	0.00	0.00	0.00	0.00	0.00	0.00	0.00	0.00	0.00
Effluent pump station	0.52	0.52	0.52	0.00	0.00	0.52	0.52	0.52	0.00	0.00
Total Annual O&M Cost	1.69	1.76	1.86	0.00	0.00	1.54	1.61	1.71	0.00	0.00
Present Worth - Annual O&M Cost	36.40	37.91	39.92	0.00	0.00	33.11	34.65	36.67	0.00	0.00
Present Worth - Replacement Costs, $million										
Infuent pump station	1.69	1.68	1.68	0.00	0.00	1.68	1.68	1.68	0.00	0.00
STA seepage pump station	0.15	0.18	0.22	0.00	0.00	0.08	0.11	0.15	0.00	0.00
FEB seepage pump station	0.00	0.00	0.00	0.00	0.00	0.00	0.00	0.00	0.00	0.00
Treatment plant influent pump station	0.00	0.00	0.00	0.00	0.00	0.00	0.00	0.00	0.00	0.00
Chemical feed system	0.00	0.00	0.00	0.00	0.00	0.00	0.00	0.00	0.00	0.00
Other major treatment plant equipment	0.00	0.00	0.00	0.00	0.00	0.00	0.00	0.00	0.00	0.00
Sludge treatment and disposal	0.00	0.00	0.00	0.00	0.00	0.00	0.00	0.00	0.00	0.00
Effluent pump station	1.68	1.68	1.68	0.00	0.00	1.68	1.68	1.68	0.00	0.00
Total Present Worth - Replacement Costs	3.50	3.53	3.57	0.00	0.00	3.43	3.46	3.50	0.00	0.00
Salvage Value, $ million										
Influent pump station demolition cost	(3.57)	(3.57)	(3.57)	0.00	0.00	(3.57)	(3.57)	(3.57)	0.00	0.00
STA seepage pump station demolition cost	(0.16)	(0.19)	(0.23)	0.00	0.00	(0.09)	(0.12)	(0.16)	0.00	0.00
FEB seepage pump station demolition cost	0.00	0.00	0.00	0.00	0.00	0.00	0.00	0.00	0.00	0.00
Treatment plant influent pump station demolition cost	0.00	0.00	0.00	0.00	0.00	0.00	0.00	0.00	0.00	0.00
Treatment plant demolition cost	0.00	0.00	0.00	0.00	0.00	0.00	0.00	0.00	0.00	0.00
Effluent pump station demolition cost	(3.57)	(3.57)	(3.57)	0.00	0.00	(3.57)	(3.57)	(3.57)	0.00	0.00
STA restoration cost	(4.08)	(4.49)	(4.98)	0.00	0.00	(3.01)	(3.56)	(4.16)	0.00	0.00
FEB restoration cost	0.00	0.00	0.00	0.00	0.00	0.00	0.00	0.00	0.00	0.00
Sludge land restoration cost	0.00	0.00	0.00	0.00	0.00	0.00	0.00	0.00	0.00	0.00
STA land value	28.53	34.52	42.43	0.00	0.00	15.55	21.64	29.63	0.00	0.00
FEB land value	0.00	0.00	0.00	0.00	0.00	0.00	0.00	0.00	0.00	0.00
Treatment plant land value	0.00	0.00	0.00	0.00	0.00	0.00	0.00	0.00	0.00	0.00
Sludge land value	0.00	0.00	0.00	0.00	0.00	0.00	0.00	0.00	0.00	0.00
Net Salvage Value	17.14	22.69	30.07	0.00	0.00	5.31	10.81	18.15	0.00	0.00
Present Worth - Salvage Value	2.41	3.19	4.23	0.00	0.00	0.75	1.52	2.55	0.00	0.00
50 - Year Present Worth, $ million										
Capital Cost	125.80	141.85	163.06	0.00	0.00	91.02	107.33	128.74	0.00	0.00
O&M Cost	36.40	37.91	39.92	0.00	0.00	33.11	34.65	36.67	0.00	0.00
Replacement Cost	3.50	3.53	3.57	0.00	0.00	3.43	3.46	3.50	0.00	0.00
Salvage Value	(2.41)	(3.19)	(4.23)	0.00	0.00	(0.75)	(1.52)	(2.55)	0.00	0.00
Total	163.28	180.10	202.31	0.00	0.00	126.81	143.92	166.36	0.00	0.00
Present worth, $/million gallons treated	47.34	52.21	58.65	0.00	0.00	36.77	41.72	48.23	0.00	0.00
Present worth, $/pound P removed	56.76	56.91	58.61	0.00	0.00	110.21	100.06	96.39	0.00	0.00

f:\9807\salvage\STAPP.xls

Present Worth Calculations for Stormwater Treatment Areas (STAs)
(Salvage Value = purchase price + 2.8% inflation)

Parameter	Influent/Effluent P Levels									
	150/50	150/40	150/30	150/20	150/10	90/50	90/40	90/30	90/20	90/10
Basis of Design										
Influent PS capacity, mgd	2330	2330	2330	0	0	2330	2330	2330	0	0
Influent PS average flow, mgd	189	189	189	0	0	189	189	189	0	0
STA area, acres	7410	8965	11020	0	0	4040	5620	7695	0	0
FEB area, acres	0	0	0	0	0	0	0	0	0	0
Treatment plant influent PS capacity, mgd	0	0	0	0	0	0	0	0	0	0
Treatment plant influent PS average flow, mgd	0	0	0	0	0	0	0	0	0	0
Treatment plant land area, acres	0	0	0	0	0	0	0	0	0	0
Sludge disposal area, acres	0	0	0	0	0	0	0	0	0	0
Effluent PS capacity, mgd	2330	2330	2330	0	0	2330	2330	2330	0	0
Effluent PS average flow, mgd	189	189	189	0	0	189	189	189	0	0
Total land area, acres	8151	9861.5	12122	0	0	4444	6182	8464.5	0	0
Capital Costs, $ million										
Influent pumping station	17.87	17.87	17.87	0.00	0.00	17.87	17.87	17.87	0.00	0.00
STA	33.96	41.09	50.50	0.00	0.00	18.52	25.76	35.27	0.00	0.00
STA seepage pump station	0.78	0.95	1.17	0.00	0.00	0.43	0.59	0.81	0.00	0.00
FEB	0.00	0.00	0.00	0.00	0.00	0.00	0.00	0.00	0.00	0.00
FEB seepage pump station	0.00	0.00	0.00	0.00	0.00	0.00	0.00	0.00	0.00	0.00
Treatment plant influent pump station	0.00	0.00	0.00	0.00	0.00	0.00	0.00	0.00	0.00	0.00
Treatment plant	0.00	0.00	0.00	0.00	0.00	0.00	0.00	0.00	0.00	0.00
Sludge treatment and disposal	0.00	0.00	0.00	0.00	0.00	0.00	0.00	0.00	0.00	0.00
Effluent pump station	17.87	17.87	17.87	0.00	0.00	17.87	17.87	17.87	0.00	0.00
Subtotal	70.49	77.78	87.41	0.00	0.00	54.68	62.09	71.82	0.00	0.00
Construction contingencies (20 percent)	14.10	15.56	17.48	0.00	0.00	10.94	12.42	14.36	0.00	0.00
Subtotal, construction costs	84.58	93.33	104.90	0.00	0.00	65.62	74.51	86.19	0.00	0.00
Engineering (15 percent)	12.69	14.00	15.73	0.00	0.00	9.84	11.18	12.93	0.00	0.00
Land purchase - STA	28.53	34.52	42.43	0.00	0.00	15.55	21.64	29.63	0.00	0.00
Land purchase - FEB	0.00	0.00	0.00	0.00	0.00	0.00	0.00	0.00	0.00	0.00
Land purchase - treatment plant	0.00	0.00	0.00	0.00	0.00	0.00	0.00	0.00	0.00	0.00
Land purchase - sludge disposal	0.00	0.00	0.00	0.00	0.00	0.00	0.00	0.00	0.00	0.00
Total Capital Cost	125.80	141.85	163.06	0.00	0.00	91.02	107.33	128.74	0.00	0.00
Present Worth - Capital Cost	125.80	141.85	163.06	0.00	0.00	91.02	107.33	128.74	0.00	0.00
O&M Costs, $ million/yr										
Influent pumping station	0.52	0.52	0.52	0.00	0.00	0.52	0.52	0.52	0.00	0.00
STA	0.22	0.27	0.33	0.00	0.00	0.12	0.17	0.23	0.00	0.00
STA seepage pump station	0.12	0.15	0.18	0.00	0.00	0.07	0.10	0.13	0.00	0.00
STA sampling and monitoring	0.30	0.30	0.30	0.00	0.00	0.30	0.30	0.30	0.00	0.00
FEB	0.00	0.00	0.00	0.00	0.00	0.00	0.00	0.00	0.00	0.00
FEB seepage pump station	0.00	0.00	0.00	0.00	0.00	0.00	0.00	0.00	0.00	0.00
Treatment plant influent pump station	0.00	0.00	0.00	0.00	0.00	0.00	0.00	0.00	0.00	0.00
Chemicals	0.00	0.00	0.00	0.00	0.00	0.00	0.00	0.00	0.00	0.00
Sludge treatment and disposal	0.00	0.00	0.00	0.00	0.00	0.00	0.00	0.00	0.00	0.00
Other treatment plant O&M	0.00	0.00	0.00	0.00	0.00	0.00	0.00	0.00	0.00	0.00
Treatment plant sampling and monitoring	0.00	0.00	0.00	0.00	0.00	0.00	0.00	0.00	0.00	0.00
Effluent pump station	0.52	0.52	0.52	0.00	0.00	0.52	0.52	0.52	0.00	0.00
Total Annual O&M Cost	1.69	1.76	1.86	0.00	0.00	1.54	1.61	1.71	0.00	0.00
Present Worth - Annual O&M Cost	36.40	37.91	39.92	0.00	0.00	33.11	34.65	36.67	0.00	0.00
Present Worth - Replacement Costs, $million										
Influent pump station	1.68	1.68	1.68	0.00	0.00	1.68	1.68	1.68	0.00	0.00
STA seepage pump station	0.15	0.18	0.22	0.00	0.00	0.08	0.11	0.15	0.00	0.00
FEB seepage pump station	0.00	0.00	0.00	0.00	0.00	0.00	0.00	0.00	0.00	0.00
Treatment plant influent pump station	0.00	0.00	0.00	0.00	0.00	0.00	0.00	0.00	0.00	0.00
Chemical feed system	0.00	0.00	0.00	0.00	0.00	0.00	0.00	0.00	0.00	0.00
Other major treatment plant equipment	0.00	0.00	0.00	0.00	0.00	0.00	0.00	0.00	0.00	0.00
Sludge treatment and disposal	0.00	0.00	0.00	0.00	0.00	0.00	0.00	0.00	0.00	0.00
Effluent pump station	1.68	1.68	1.68	0.00	0.00	1.68	1.68	1.68	0.00	0.00
Total Present Worth - Replacement Costs	3.50	3.53	3.57	0.00	0.00	3.43	3.46	3.50	0.00	0.00
Salvage Value, $ million										
Influent pump station demolition cost	(3.57)	(3.57)	(3.57)	0.00	0.00	(3.57)	(3.57)	(3.57)	0.00	0.00
STA seepage pump station demolition cost	(0.16)	(0.19)	(0.23)	0.00	0.00	(0.09)	(0.12)	(0.16)	0.00	0.00
FEB seepage pump station demolition cost	0.00	0.00	0.00	0.00	0.00	0.00	0.00	0.00	0.00	0.00
Treatment plant influent pump station demolition cost	0.00	0.00	0.00	0.00	0.00	0.00	0.00	0.00	0.00	0.00
Treatment plant demolition cost	0.00	0.00	0.00	0.00	0.00	0.00	0.00	0.00	0.00	0.00
Effluent pump station demolition cost	(3.57)	(3.57)	(3.57)	0.00	0.00	(3.57)	(3.57)	(3.57)	0.00	0.00
STA restoration cost	(4.08)	(4.49)	(4.98)	0.00	0.00	(3.01)	(3.56)	(4.16)	0.00	0.00
FEB restoration cost	0.00	0.00	0.00	0.00	0.00	0.00	0.00	0.00	0.00	0.00
Sludge land restoration cost	0.00	0.00	0.00	0.00	0.00	0.00	0.00	0.00	0.00	0.00
STA land value	113.48	137.30	168.77	0.00	0.00	61.87	86.07	117.85	0.00	0.00
FEB land value	0.00	0.00	0.00	0.00	0.00	0.00	0.00	0.00	0.00	0.00
Treatment plant land value	0.00	0.00	0.00	0.00	0.00	0.00	0.00	0.00	0.00	0.00
Sludge land value	0.00	0.00	0.00	0.00	0.00	0.00	0.00	0.00	0.00	0.00
Net Salvage Value	102.10	125.47	156.41	0.00	0.00	51.62	75.25	106.38	0.00	0.00
Present Worth - Salvage Value	14.37	17.66	22.01	0.00	0.00	7.26	10.59	14.97	0.00	0.00
50 - Year Present Worth, $ million										
Capital Cost	125.80	141.85	163.06	0.00	0.00	91.02	107.33	128.74	0.00	0.00
O&M Cost	36.40	37.91	39.92	0.00	0.00	33.11	34.65	36.67	0.00	0.00
Replacement Cost	3.50	3.53	3.57	0.00	0.00	3.43	3.46	3.50	0.00	0.00
Salvage Value	(14.37)	(17.66)	(22.01)	0.00	0.00	(7.26)	(10.59)	(14.97)	0.00	0.00
Total	151.33	165.63	184.53	0.00	0.00	120.30	134.85	153.95	0.00	0.00
Present worth, $/million gallons treated	43.87	48.02	53.50	0.00	0.00	34.88	39.10	44.63	0.00	0.00
Present worth, $/pound P removed	52.61	52.34	53.46	0.00	0.00	104.55	93.76	89.19	0.00	0.00

I:\3807\salvage\STAPPI.xls

Present Worth Calculations for Chemical Treatment/Direct Filtration
(Salvage Value = 0)

Parameter	Influent/Effluent P Levels									
	150/50	150/40	150/30	150/20	150/10	90/50	90/40	90/30	90/20	90/10
Basis of Design										
Influent PS capacity, mgd	2330	2330	2330	2330	2330	2330	2330	2330	2330	2330
Influent PS average flow, mgd	189	189	189	189	189	189	189	189	189	189
STA area, acres	0	0	0	0	0	0	0	0	0	0
FEB area, acres	500	500	1000	1500	2500	200	300	500	800	1500
Treatment plant influent PS capacity, mgd	251	327	360	448	710	127	187	263	370	615
Treatment plant influent PS average flow, mgd	128	143	158	173	189	79	105	130	156	182
Treatment plant land area, acres	27	30	33	36	40	17	22	27	33	38
Sludge disposal area, acres	269	300	332	363	397	166	221	273	328	382
Effluent PS capacity, mgd	2330	2330	2330	2330	2330	2330	2330	2330	2330	2330
Effluent PS average flow, mgd	189	189	189	189	189	189	189	189	189	189
Total land area, acres	875	913	1,501	2,090	3,230	421	597	880	1,276	2,112
Capital Costs, $ million										
Influent pumping station	17.87	17.87	17.87	17.87	17.87	17.87	17.87	17.87	17.87	17.87
STA	0.00	0.00	0.00	0.00	0.00	0.00	0.00	0.00	0.00	0.00
STA seepage pump station	0.00	0.00	0.00	0.00	0.00	0.00	0.00	0.00	0.00	0.00
FEB	4.13	4.13	8.25	12.38	20.63	1.65	2.48	4.13	6.60	12.38
FEB seepage pump station	0.11	0.11	0.21	0.32	0.53	0.04	0.06	0.11	0.17	0.32
Treatment plant influent pump station	2.41	3.14	3.45	4.30	6.81	1.22	1.79	2.52	3.55	5.90
Treatment plant	27.45	33.34	35.90	42.72	63.03	17.84	22.49	28.38	36.68	55.66
Sludge treatment and disposal	2.56	2.86	3.16	3.46	3.78	1.58	2.10	2.60	3.12	3.64
Effluent pump station	17.87	17.87	17.87	17.87	17.87	17.87	17.87	17.87	17.87	17.87
Subtotal	72.39	79.31	86.72	98.91	130.51	58.07	64.67	73.48	85.85	113.63
Construction contingencies (20 percent)	14.48	15.86	17.34	19.78	26.10	11.61	12.93	14.70	17.17	22.73
Subtotal, construction costs	86.87	95.17	104.06	118.69	156.61	69.69	77.60	88.17	103.03	136.36
Engineering (15 percent)	13.03	14.28	15.61	17.80	23.49	10.45	11.64	13.23	15.45	20.45
Land purchase - STA	0.00	0.00	0.00	0.00	0.00	0.00	0.00	0.00	0.00	0.00
Land purchase - FEB	1.93	1.93	3.85	5.78	9.63	0.77	1.16	1.93	3.08	5.78
Land purchase - treatment plant	0.10	0.12	0.13	0.14	0.15	0.06	0.08	0.11	0.13	0.15
Land purchase - sludge disposal	1.03	1.16	1.28	1.40	1.53	0.64	0.85	1.05	1.26	1.47
Total Capital Cost	102.97	112.65	124.92	143.81	191.41	81.62	91.33	104.48	122.95	164.21
Present Worth - Capital Cost	102.97	112.65	124.92	143.81	191.41	81.62	91.33	104.48	122.95	164.21
O&M Costs, $ million/yr										
Influent pumping station	0.52	0.52	0.52	0.52	0.52	0.52	0.52	0.52	0.52	0.52
STA	0.00	0.00	0.00	0.00	0.00	0.00	0.00	0.00	0.00	0.00
STA seepage pump station	0.00	0.00	0.00	0.00	0.00	0.00	0.00	0.00	0.00	0.00
STA sampling and monitoring	0.00	0.00	0.00	0.00	0.00	0.00	0.00	0.00	0.00	0.00
FEB	0.03	0.03	0.06	0.09	0.15	0.01	0.02	0.03	0.05	0.09
FEB seepage pump station	0.02	0.02	0.03	0.05	0.07	0.01	0.02	0.02	0.03	0.05
Treatment plant influent pump station	0.38	0.40	0.42	0.44	0.47	0.31	0.35	0.38	0.42	0.46
Chemicals	2.23	2.49	2.75	3.01	3.29	1.37	1.83	2.26	2.71	3.17
Sludge treatment and disposal	0.15	0.17	0.18	0.20	0.22	0.09	0.12	0.15	0.18	0.21
Other treatment plant O&M	0.79	0.87	0.95	1.03	1.11	0.52	0.66	0.80	0.94	1.08
Treatment plant sampling and monitoring	0.30	0.30	0.30	0.30	0.30	0.30	0.30	0.30	0.30	0.30
Effluent pump station	0.52	0.52	0.52	0.52	0.52	0.52	0.52	0.52	0.52	0.52
Total Annual O&M Cost	4.94	5.32	5.74	6.16	6.65	3.67	4.34	4.99	5.67	6.39
Present Worth - Annual O&M Cost	106.11	114.26	123.32	132.37	142.87	78.93	93.24	107.20	121.87	137.27
Present Worth - Replacement Costs, $million										
Influent pump station	1.68	1.68	1.68	1.68	1.68	1.68	1.68	1.68	1.68	1.68
STA seepage pump station	0.00	0.00	0.00	0.00	0.00	0.00	0.00	0.00	0.00	0.00
FEB seepage pump station	0.02	0.02	0.04	0.06	0.10	0.01	0.01	0.02	0.03	0.06
Treatment plant influent pump station	0.45	0.59	0.65	0.81	1.28	0.23	0.34	0.47	0.67	1.11
Chemical feed system	0.40	0.49	0.53	0.63	0.92	0.26	0.33	0.42	0.54	0.81
Other major treatment plant equipment	4.56	5.54	5.97	7.10	10.47	2.96	3.74	4.72	6.09	9.25
Sludge treatment and disposal	0.43	0.48	0.53	0.57	0.63	0.26	0.35	0.43	0.52	0.60
Effluent pump station	1.68	1.68	1.68	1.68	1.68	1.68	1.68	1.68	1.68	1.68
Total Present Worth - Replacement Costs	9.21	10.46	11.06	12.52	16.75	7.08	8.12	9.41	11.20	15.19
Salvage Value, $ million										
Influent pump station demolition cost	(3.57)	(3.57)	(3.57)	(3.57)	(3.57)	(3.57)	(3.57)	(3.57)	(3.57)	(3.57)
STA seepage pump station demolition cost	0.00	0.00	0.00	0.00	0.00	0.00	0.00	0.00	0.00	0.00
FEB seepage pump station demolition cost	(0.02)	(0.02)	(0.04)	(0.06)	(0.11)	(0.01)	(0.01)	(0.02)	(0.03)	(0.06)
Treatment plant influent pump station demolition cost	(0.48)	(0.63)	(0.69)	(0.86)	(1.36)	(0.24)	(0.36)	(0.50)	(0.71)	(1.18)
Treatment plant demolition cost	(5.49)	(6.67)	(7.18)	(8.54)	(12.61)	(3.57)	(4.50)	(5.68)	(7.34)	(11.13)
Effluent pump station demolition cost	(3.57)	(3.57)	(3.57)	(3.57)	(3.57)	(3.57)	(3.57)	(3.57)	(3.57)	(3.57)
STA restoration cost	0.00	0.00	0.00	0.00	0.00	0.00	0.00	0.00	0.00	0.00
FEB restoration cost	(1.41)	(1.41)	(2.00)	(2.45)	(3.16)	(0.89)	(1.10)	(1.41)	(1.79)	(2.45)
Sludge land restoration cost	0.00	0.00	0.00	0.00	0.00	0.00	0.00	0.00	0.00	0.00
STA land value	0.00	0.00	0.00	0.00	0.00	0.00	0.00	0.00	0.00	0.00
FEB land value	0.00	0.00	0.00	0.00	0.00	0.00	0.00	0.00	0.00	0.00
Treatment plant land value	0.00	0.00	0.00	0.00	0.00	0.00	0.00	0.00	0.00	0.00
Sludge land value	0.00	0.00	0.00	0.00	0.00	0.00	0.00	0.00	0.00	0.00
Net Salvage Value	(14.56)	(15.88)	(17.06)	(19.06)	(24.38)	(11.86)	(13.11)	(14.76)	(17.02)	(21.97)
Present Worth - Salvage Value	(2.05)	(2.23)	(2.40)	(2.68)	(3.43)	(1.67)	(1.85)	(2.08)	(2.39)	(3.09)
50 - Year Present Worth, $ million										
Capital Cost	102.97	112.65	124.92	143.81	191.41	81.62	91.33	104.48	122.95	164.21
O&M Cost	106.11	114.26	123.32	132.37	142.87	78.93	93.24	107.20	121.87	137.27
Replacement Cost	9.21	10.46	11.06	12.52	16.75	7.08	8.12	9.41	11.20	15.19
Salvage Value	2.05	2.23	2.40	2.68	3.43	1.67	1.85	2.08	2.39	3.09
Total	220.33	239.61	261.70	291.38	354.46	169.29	194.53	223.16	258.41	319.75
Present worth, $/million gallons treated	63.88	69.47	75.87	84.48	102.76	49.08	56.40	64.70	74.92	92.70
Present worth, $/pound P removed	76.59	75.72	75.81	77.92	88.01	147.12	135.25	129.29	128.33	138.94

f:\3807\salvage\DF0.xls

Present Worth Calculations for Chemical Treatment/Direct Filtration
(Salvage Value = purchase price)

Parameter	Influent/Effluent P Levels									
	150/50	150/40	150/30	150/20	150/10	90/50	90/40	90/30	90/20	90/10
Basis of Design										
Influent PS capacity, mgd	2330	2330	2330	2330	2330	2330	2330	2330	2330	2330
Influent PS average flow, mgd	189	189	189	189	189	189	189	189	189	189
STA area, acres	0	0	0	0	0	0	0	0	0	0
FEB area, acres	500	500	1000	1500	2500	200	300	500	800	1500
Treatment plant influent PS capacity, mgd	251	327	360	448	710	127	187	263	370	615
Treatment plant influent PS average flow, mgd	128	143	158	173	189	79	105	130	156	182
Treatment plant land area, acres	27	30	33	36	40	17	22	27	33	38
Sludge disposal area, acres	269	300	332	363	397	166	221	273	329	382
Effluent PS capacity, mgd	2330	2330	2330	2330	2330	2330	2330	2330	2330	2330
Effluent PS average flow, mgd	189	189	189	189	189	189	189	189	189	189
Total land area, acres	875	913	1,501	2,090	3,230	421	597	880	1,276	2,112
Capital Costs, $ million										
Influent pumping station	17.87	17.87	17.87	17.87	17.87	17.87	17.87	17.87	17.87	17.87
STA	0.00	0.00	0.00	0.00	0.00	0.00	0.00	0.00	0.00	0.00
STA seepage pump station	0.00	0.00	0.00	0.00	0.00	0.00	0.00	0.00	0.00	0.00
FEB	4.13	4.13	8.25	12.38	20.63	1.65	2.48	4.13	6.60	12.38
FEB seepage pump station	0.11	0.11	0.21	0.32	0.53	0.04	0.06	0.11	0.17	0.32
Treatment plant influent pump station	2.41	3.14	3.45	4.30	6.81	1.22	1.79	2.52	3.55	5.90
Treatment plant	27.45	33.34	35.90	42.72	63.03	17.84	22.49	28.38	36.68	55.66
Sludge treatment and disposal	2.56	2.86	3.16	3.46	3.78	1.58	2.10	2.60	3.12	3.64
Effluent pump station	17.87	17.87	17.87	17.87	17.87	17.87	17.87	17.87	17.87	17.87
Subtotal	72.39	79.31	86.72	98.91	130.51	58.07	64.67	73.48	85.85	113.63
Construction contingencies (20 percent)	14.48	15.86	17.34	19.78	26.10	11.61	12.93	14.70	17.17	22.73
Subtotal, construction costs	86.87	95.17	104.06	118.69	156.61	69.69	77.60	88.17	103.03	136.36
Engineering (15 percent)	13.03	14.28	15.61	17.80	23.49	10.45	11.64	13.23	15.45	20.45
Land purchase - STA	0.00	0.00	0.00	0.00	0.00	0.00	0.00	0.00	0.00	0.00
Land purchase - FEB	1.93	1.93	3.85	5.78	9.63	0.77	1.16	1.93	3.08	5.78
Land purchase - treatment plant	0.10	0.12	0.13	0.14	0.15	0.06	0.08	0.11	0.13	0.15
Land purchase - sludge disposal	1.03	1.16	1.28	1.40	1.53	0.64	0.85	1.05	1.26	1.47
Total Capital Cost	102.97	112.65	124.92	143.81	191.41	81.62	91.33	104.48	122.95	164.21
Present Worth - Capital Cost	102.97	112.65	124.92	143.81	191.41	81.62	91.33	104.48	122.95	164.21
O&M Costs, $ million/yr										
Influent pumping station	0.52	0.52	0.52	0.52	0.52	0.52	0.52	0.52	0.52	0.52
STA	0.00	0.00	0.00	0.00	0.00	0.00	0.00	0.00	0.00	0.00
STA seepage pump station	0.00	0.00	0.00	0.00	0.00	0.00	0.00	0.00	0.00	0.00
STA sampling and monitoring	0.00	0.00	0.00	0.00	0.00	0.00	0.00	0.00	0.00	0.00
FEB	0.03	0.03	0.06	0.09	0.15	0.01	0.02	0.03	0.05	0.09
FEB seepage pump station	0.02	0.02	0.03	0.05	0.07	0.01	0.02	0.02	0.03	0.05
Treatment plant influent pump station	0.38	0.40	0.42	0.44	0.47	0.31	0.35	0.38	0.42	0.46
Chemicals	2.23	2.49	2.75	3.01	3.29	1.37	1.83	2.26	2.71	3.17
Sludge treatment and disposal	0.15	0.17	0.18	0.20	0.22	0.09	0.12	0.15	0.18	0.21
Other treatment plant O&M	0.79	0.87	0.95	1.03	1.11	0.52	0.66	0.80	0.94	1.08
Treatment plant sampling and monitoring	0.30	0.30	0.30	0.30	0.30	0.30	0.30	0.30	0.30	0.30
Effluent pump station	0.52	0.52	0.52	0.52	0.52	0.52	0.52	0.52	0.52	0.52
Total Annual O&M Cost	4.94	5.32	5.74	6.16	6.65	3.67	4.34	4.99	5.67	6.39
Present Worth - Annual O&M Cost	106.11	114.26	123.32	132.37	142.87	78.93	93.24	107.20	121.87	137.27
Present Worth - Replacement Costs, $million										
Influent pump station	1.68	1.68	1.68	1.68	1.68	1.68	1.68	1.68	1.68	1.68
STA seepage pump station	0.00	0.00	0.00	0.00	0.00	0.00	0.00	0.00	0.00	0.00
FEB seepage pump station	0.02	0.02	0.04	0.06	0.10	0.01	0.01	0.02	0.03	0.06
Treatment plant influent pump station	0.45	0.59	0.65	0.81	1.28	0.23	0.34	0.47	0.67	1.11
Chemical feed system	0.40	0.49	0.53	0.63	0.92	0.26	0.33	0.42	0.54	0.81
Other major treatment plant equipment	4.56	5.54	5.97	7.10	10.47	2.96	3.74	4.72	6.09	9.25
Sludge treatment and disposal	0.43	0.49	0.53	0.57	0.63	0.26	0.35	0.43	0.52	0.60
Effluent pump station	1.68	1.68	1.68	1.68	1.68	1.68	1.68	1.68	1.68	1.68
Total Present Worth - Replacement Costs	9.21	10.46	11.06	12.52	16.75	7.08	8.12	9.41	11.20	15.19
Salvage Value, $ million										
Influent pump station demolition cost	(3.57)	(3.57)	(3.57)	(3.57)	(3.57)	(3.57)	(3.57)	(3.57)	(3.57)	(3.57)
STA seepage pump station demolition cost	0.00	0.00	0.00	0.00	0.00	0.00	0.00	0.00	0.00	0.00
FEB seepage pump station demolition cost	(0.02)	(0.02)	(0.04)	(0.06)	(0.11)	(0.01)	(0.01)	(0.02)	(0.03)	(0.06)
Treatment plant influent pump station demolition cost	(0.48)	(0.63)	(0.69)	(0.86)	(1.36)	(0.24)	(0.36)	(0.50)	(0.71)	(1.18)
Treatment plant demolition cost	(5.49)	(6.67)	(7.18)	(8.54)	(12.61)	(3.57)	(4.50)	(5.69)	(7.34)	(11.13)
Effluent pump station demolition cost	(3.57)	(3.57)	(3.57)	(3.57)	(3.57)	(3.57)	(3.57)	(3.57)	(3.57)	(3.57)
STA restoration cost	0.00	0.00	0.00	0.00	0.00	0.00	0.00	0.00	0.00	0.00
FEB restoration cost	(1.41)	(1.41)	(2.00)	(2.45)	(3.16)	(0.89)	(1.10)	(1.41)	(1.79)	(2.45)
Sludge land restoration cost	0.00	0.00	0.00	0.00	0.00	0.00	0.00	0.00	0.00	0.00
STA land value	0.00	0.00	0.00	0.00	0.00	0.00	0.00	0.00	0.00	0.00
FEB land value	1.93	1.93	3.85	5.78	9.63	0.77	1.16	1.93	3.08	5.78
Treatment plant land value	0.10	0.12	0.13	0.14	0.15	0.06	0.08	0.11	0.13	0.15
Sludge land value	0.00	0.00	0.00	0.00	0.00	0.00	0.00	0.00	0.00	0.00
Net Salvage Value	(12.53)	(13.84)	(13.08)	(13.15)	(14.61)	(11.03)	(11.87)	(12.73)	(13.81)	(16.05)
Present Worth - Salvage Value	(1.76)	(1.95)	(1.84)	(1.85)	(2.06)	(1.55)	(1.67)	(1.79)	(1.94)	(2.26)
50 - Year Present Worth, $ million										
Capital Cost	102.97	112.65	124.92	143.81	191.41	81.62	91.33	104.48	122.95	164.21
O&M Cost	106.11	114.26	123.32	132.37	142.87	78.93	93.24	107.20	121.87	137.27
Replacement Cost	9.21	10.46	11.06	12.52	16.75	7.08	8.12	9.41	11.20	15.19
Salvage Value	1.76	1.95	1.84	1.85	2.06	1.55	1.67	1.79	1.94	2.26
Total	220.05	239.32	261.14	290.55	353.08	169.17	194.36	222.88	257.96	318.92
Present worth, $/million gallons treated	63.80	69.38	75.71	84.24	102.37	49.05	56.35	64.62	74.79	92.46
Present worth, $/pound P removed	76.49	75.63	75.65	77.69	87.67	147.02	135.13	129.13	128.10	138.58

t:\3807\discount\DFPP.xls

Present Worth Calculations for Chemical Treatment/Direct Filtration
(Salvage Value = purchase price + 2.8% inflation)

Parameter	Influent/Effluent P Levels									
	150/50	150/40	150/30	150/20	150/10	90/50	90/40	90/30	90/20	90/10
Basis of Design										
Influent PS capacity, mgd	2330	2330	2330	2330	2330	2330	2330	2330	2330	2330
Influent PS average flow, mgd	189	189	189	189	189	189	189	189	189	189
STA area, acres	0	0	0	0	0	0	0	0	0	0
FEB area, acres	500	500	1000	1500	2500	200	300	500	800	1500
Treatment plant influent PS capacity, mgd	251	327	360	448	710	127	187	263	370	615
Treatment plant influent PS average flow, mgd	128	143	158	173	189	79	105	130	156	182
Treatment plant land area, acres	27	30	33	36	40	17	22	27	33	38
Sludge disposal area, acres	269	300	332	363	397	166	221	273	328	382
Effluent PS capacity, mgd	2330	2330	2330	2330	2330	2330	2330	2330	2330	2330
Effluent PS average flow, mgd	189	189	189	189	189	189	189	189	189	189
Total land area, acres	875	913	1,501	2,090	3,230	421	597	880	1,276	2,112
Capital Costs, $ million										
Influent pumping station	17.87	17.87	17.87	17.87	17.87	17.87	17.87	17.87	17.87	17.87
STA	0.00	0.00	0.00	0.00	0.00	0.00	0.00	0.00	0.00	0.00
STA seepage pump station	0.00	0.00	0.00	0.00	0.00	0.00	0.00	0.00	0.00	0.00
FEB	4.13	4.13	8.25	12.38	20.63	1.65	2.48	4.13	6.60	12.38
FEB seepage pump station	0.11	0.11	0.21	0.32	0.53	0.04	0.06	0.11	0.17	0.32
Treatment plant influent pump station	2.41	3.14	3.45	4.30	6.81	1.22	1.79	2.52	3.55	5.90
Treatment plant	27.45	33.34	35.90	42.72	63.03	17.84	22.49	28.38	36.68	55.66
Sludge treatment and disposal	2.56	2.86	3.16	3.46	3.78	1.59	2.10	2.60	3.12	3.64
Effluent pump station	17.87	17.87	17.87	17.87	17.87	17.87	17.87	17.87	17.87	17.87
Subtotal	72.39	79.31	86.72	98.91	130.51	58.07	64.67	73.48	85.85	113.63
Construction contingencies (20 percent)	14.48	15.86	17.34	19.78	26.10	11.61	12.93	14.70	17.17	22.73
Subtotal, construction costs	86.87	95.17	104.06	118.69	156.61	69.69	77.60	88.17	103.03	136.36
Engineering (15 percent)	13.03	14.28	15.61	17.80	23.49	10.45	11.64	13.23	15.45	20.45
Land purchase - STA	0.00	0.00	0.00	0.00	0.00	0.00	0.00	0.00	0.00	0.00
Land purchase - FEB	1.93	1.93	3.85	5.78	9.63	0.77	1.16	1.93	3.08	5.78
Land purchase - treatment plant	0.10	0.12	0.13	0.14	0.15	0.06	0.08	0.11	0.13	0.15
Land purchase - sludge disposal	1.03	1.16	1.28	1.40	1.53	0.64	0.85	1.05	1.26	1.47
Total Capital Cost	102.97	112.65	124.92	143.81	191.41	81.62	91.33	104.48	122.95	164.21
Present Worth - Capital Cost	102.97	112.65	124.92	143.81	191.41	81.62	91.33	104.48	122.95	164.21
O&M Costs, $ million/yr										
Influent pumping station	0.52	0.52	0.52	0.52	0.52	0.52	0.52	0.52	0.52	0.52
STA	0.00	0.00	0.00	0.00	0.00	0.00	0.00	0.00	0.00	0.00
STA seepage pump station	0.00	0.00	0.00	0.00	0.00	0.00	0.00	0.00	0.00	0.00
STA sampling and monitoring	0.00	0.00	0.00	0.00	0.00	0.00	0.00	0.00	0.00	0.00
FEB	0.03	0.03	0.06	0.09	0.15	0.01	0.02	0.03	0.05	0.09
FEB seepage pump station	0.02	0.02	0.03	0.05	0.07	0.01	0.02	0.02	0.03	0.05
Treatment plant influent pump station	0.38	0.40	0.42	0.44	0.47	0.31	0.35	0.38	0.42	0.46
Chemicals	2.23	2.49	2.75	3.01	3.29	1.37	1.83	2.26	2.71	3.17
Sludge treatment and disposal	0.15	0.17	0.18	0.20	0.22	0.09	0.12	0.15	0.18	0.21
Other treatment plant O&M	0.79	0.87	0.95	1.03	1.11	0.52	0.66	0.80	0.94	1.08
Treatment plant sampling and monitoring	0.30	0.30	0.30	0.30	0.30	0.30	0.30	0.30	0.30	0.30
Effluent pump station	0.52	0.52	0.52	0.52	0.52	0.52	0.52	0.52	0.52	0.52
Total Annual O&M Cost	4.94	5.32	5.74	6.16	6.65	3.67	4.34	4.99	5.67	6.39
Present Worth - Annual O&M Cost	106.11	114.26	123.32	132.37	142.87	78.93	93.24	107.20	121.87	137.27
Present Worth - Replacement Costs, $million										
Influent pump station	1.68	1.68	1.68	1.68	1.68	1.68	1.68	1.68	1.68	1.68
STA seepage pump station	0.00	0.00	0.00	0.00	0.00	0.00	0.00	0.00	0.00	0.00
FEB seepage pump station	0.02	0.02	0.04	0.06	0.10	0.01	0.01	0.02	0.03	0.06
Treatment plant influent pump station	0.45	0.59	0.65	0.81	1.28	0.23	0.34	0.47	0.67	1.11
Chemical feed system	0.40	0.49	0.53	0.63	0.92	0.26	0.33	0.42	0.54	0.81
Other major treatment plant equipment	4.56	5.54	5.97	7.10	10.47	2.96	3.74	4.72	6.09	9.25
Sludge treatment and disposal	0.43	0.48	0.53	0.57	0.63	0.26	0.35	0.43	0.52	0.60
Effluent pump station	1.68	1.68	1.68	1.68	1.68	1.68	1.68	1.68	1.68	1.68
Total Present Worth - Replacement Costs	9.21	10.46	11.06	12.52	16.75	7.08	8.12	9.41	11.20	15.19
Salvage Value, $ million										
Influent pump station demolition cost	(3.57)	(3.57)	(3.57)	(3.57)	(3.57)	(3.57)	(3.57)	(3.57)	(3.57)	(3.57)
STA seepage pump station demolition cost	0.00	0.00	0.00	0.00	0.00	0.00	0.00	0.00	0.00	0.00
FEB seepage pump station demolition cost	(0.02)	(0.02)	(0.04)	(0.06)	(0.11)	(0.01)	(0.01)	(0.02)	(0.03)	(0.06)
Treatment plant influent pump station demolition cost	(0.48)	(0.63)	(0.69)	(0.86)	(1.36)	(0.24)	(0.36)	(0.50)	(0.71)	(1.18)
Treatment plant demolition cost	(5.49)	(6.67)	(7.18)	(8.54)	(12.61)	(3.57)	(4.50)	(5.68)	(7.34)	(11.13)
Effluent pump station demolition cost	(3.57)	(3.57)	(3.57)	(3.57)	(3.57)	(3.57)	(3.57)	(3.57)	(3.57)	(3.57)
STA restoration cost	0.00	0.00	0.00	0.00	0.00	0.00	0.00	0.00	0.00	0.00
FEB restoration cost	(1.41)	(1.41)	(2.00)	(2.45)	(3.16)	(0.89)	(1.10)	(1.41)	(1.79)	(2.45)
Sludge land restoration cost	0.00	0.00	0.00	0.00	0.00	0.00	0.00	0.00	0.00	0.00
STA land value	0.00	0.00	0.00	0.00	0.00	0.00	0.00	0.00	0.00	0.00
FEB land value	7.66	7.66	15.31	22.97	38.29	3.06	4.59	7.66	12.25	22.97
Treatment plant land value	0.41	0.46	0.51	0.56	0.61	0.25	0.34	0.42	0.50	0.59
Sludge land value	4.12	4.60	5.08	5.56	6.08	2.54	3.38	4.18	5.02	5.85
Net Salvage Value	(2.37)	(3.16)	3.84	10.03	20.59	(6.01)	(4.80)	(2.51)	0.76	7.44
Present Worth - Salvage Value	(0.33)	(0.45)	0.54	1.41	2.90	(0.85)	(0.68)	(0.35)	0.11	1.05
50 - Year Present Worth, $ million										
Capital Cost	102.97	112.65	124.92	143.81	191.41	81.62	91.33	104.48	122.95	164.21
O&M Cost	106.11	114.26	123.32	132.37	142.87	78.93	93.24	107.20	121.87	137.27
Replacement Cost	9.21	10.46	11.06	12.52	16.75	7.08	8.12	9.41	11.20	15.19
Salvage Value	0.33	0.45	(0.54)	(1.41)	(2.90)	0.85	0.68	0.35	(0.11)	(1.05)
Total	218.62	237.82	258.76	287.29	348.13	168.46	193.36	221.44	255.91	315.62
Present worth, $/million gallons treated	63.38	68.95	75.02	83.29	100.93	48.84	56.06	64.20	74.19	91.50
Present worth, $/pound P removed	76.00	75.16	74.96	76.82	86.44	146.41	134.44	128.29	127.09	137.14

I:\3807\discount\DFPPI.xls

Present Worth Calculations for STA - Chemical Treatment/Direct Filtration
(Salvage Value = 0)

Parameter	Influent/Effluent P Levels									
	150/50	150/40	150/30	150/20	150/10	90/50	90/40	90/30	90/20	90/10
Basis of Design										
Influent PS capacity, mgd	2330	2330	2330	2330	2330	2330	2330	2330	2330	2330
Influent PS average flow, mgd	189	189	189	189	189	189	189	189	189	189
STA area, acres	7410	7410	7410	7410	7410	4040	4040	4040	4040	4040
FEB area, acres	0	0	0	0	0	0	0	0	0	0
Treatment plant influent PS capacity, mgd	0	42	89	155	360	0	43	95	181	420
Treatment plant influent PS average flow, mgd	0	42	83	128	176	0	42	86	130	174
Treatment plant land area, acres	0	9	17	27	37	0	9	18	27	37
Sludge disposal area, acres	0	88	174	269	370	0	88	181	273	365
Effluent PS capacity, mgd	2330	2330	2330	2330	2330	2330	2330	2330	2330	2330
Effluent PS average flow, mgd	189	189	189	189	189	189	189	189	189	189
Total land area, acres	8,151	8,258	8,362	8,476	8,598	4,444	4,551	4,663	4,774	4,886
Capital Costs, $ million										
Influent pumping station	17.87	17.87	17.87	17.87	17.87	17.87	17.87	17.87	17.87	17.87
STA	33.96	33.96	33.96	33.96	33.96	18.52	18.52	18.52	18.52	18.52
STA seepage pump station	0.78	0.78	0.78	0.78	0.78	0.43	0.43	0.43	0.43	0.43
FEB	0.00	0.00	0.00	0.00	0.00	0.00	0.00	0.00	0.00	0.00
FEB seepage pump station	0.00	0.00	0.00	0.00	0.00	0.00	0.00	0.00	0.00	0.00
Treatment plant influent pump station	0.00	0.40	0.85	1.49	3.45	0.00	0.41	0.91	1.74	4.03
Treatment plant	0.00	11.26	14.90	20.01	35.90	0.00	11.33	15.36	22.03	40.55
Sludge treatment and disposal	0.00	0.84	1.66	2.56	3.52	0.00	0.84	1.72	2.60	3.48
Effluent pump station	17.87	17.87	17.87	17.87	17.87	17.87	17.87	17.87	17.87	17.87
Subtotal	70.49	82.98	87.90	94.55	113.36	54.68	67.27	72.68	81.05	102.74
Construction contingencies (20 percent)	14.10	16.60	17.58	18.91	22.67	10.94	13.45	14.54	16.21	20.55
Subtotal, construction costs	84.58	99.58	105.48	113.45	136.03	65.62	80.72	87.21	97.26	123.29
Engineering (15 percent)	12.69	14.94	15.82	17.02	20.40	9.84	12.11	13.08	14.59	18.49
Land purchase - STA	28.53	28.53	28.53	28.53	28.53	15.55	15.55	15.55	15.55	15.55
Land purchase - FEB	0.00	0.00	0.00	0.00	0.00	0.00	0.00	0.00	0.00	0.00
Land purchase - treatment plant	0.00	0.03	0.07	0.10	0.14	0.00	0.03	0.07	0.11	0.14
Land purchase - sludge disposal	0.00	0.34	0.67	1.03	1.42	0.00	0.34	0.70	1.05	1.41
Total Capital Cost	125.80	143.42	150.56	160.14	186.53	91.02	108.76	116.62	128.56	158.89
Present Worth - Capital Cost	125.80	143.42	150.56	160.14	186.53	91.02	108.76	116.62	128.56	158.89
O&M Costs, $ million/yr										
Influent pumping station	0.52	0.52	0.52	0.52	0.52	0.52	0.52	0.52	0.52	0.52
STA	0.22	0.22	0.22	0.22	0.22	0.12	0.12	0.12	0.12	0.12
STA seepage pump station	0.12	0.12	0.12	0.12	0.12	0.07	0.07	0.07	0.07	0.07
STA sampling and monitoring	0.30	0.30	0.30	0.30	0.30	0.30	0.30	0.30	0.30	0.30
FEB	0.00	0.00	0.00	0.00	0.00	0.00	0.00	0.00	0.00	0.00
FEB seepage pump station	0.00	0.00	0.00	0.00	0.00	0.00	0.00	0.00	0.00	0.00
Treatment plant influent pump station	0.00	0.26	0.32	0.38	0.45	0.00	0.26	0.32	0.38	0.44
Chemicals	0.00	0.73	1.44	2.23	3.06	0.00	0.73	1.50	2.26	3.03
Sludge treatment and disposal	0.00	0.05	0.10	0.15	0.20	0.00	0.05	0.10	0.15	0.20
Other treatment plant O&M	0.00	0.26	0.51	0.78	1.07	0.00	0.26	0.52	0.79	1.06
Treatment plant sampling and monitoring	0.00	0.15	0.15	0.15	0.15	0.00	0.15	0.15	0.15	0.15
Effluent pump station	0.52	0.52	0.52	0.52	0.52	0.52	0.52	0.52	0.52	0.52
Total Annual O&M Cost	1.69	3.14	4.21	5.38	6.63	1.54	2.99	4.13	5.28	6.42
Present Worth - Annual O&M Cost	36.40	67.42	90.36	115.55	142.41	33.11	64.13	88.76	113.38	138.00
Present Worth - Replacement Costs, $million										
Infuent pump station	1.68	1.68	1.68	1.68	1.68	1.68	1.68	1.68	1.68	1.68
STA seepage pump station	0.15	0.15	0.15	0.15	0.15	0.08	0.08	0.08	0.08	0.08
FEB seepage pump station	0.00	0.00	0.00	0.00	0.00	0.00	0.00	0.00	0.00	0.00
Treatment plant influent pump station	0.00	0.08	0.16	0.28	0.65	0.00	0.08	0.17	0.33	0.76
Chemical feed system	0.00	0.16	0.22	0.29	0.53	0.00	0.17	0.22	0.32	0.59
Other major treatment plant equipment	0.00	1.87	2.48	3.33	5.97	0.00	1.88	2.55	3.66	6.74
Sludge treatment and disposal	0.00	0.14	0.28	0.43	0.58	0.00	0.14	0.29	0.43	0.58
Effluent pump station	1.68	1.68	1.68	1.68	1.68	1.68	1.68	1.68	1.68	1.68
Total Present Worth - Replacement Costs	3.50	5.75	6.63	7.82	11.22	3.43	5.70	6.67	8.17	12.10
Salvage Value, $ million										
Influent pump station demolition cost	(3.57)	(3.57)	(3.57)	(3.57)	(3.57)	(3.57)	(3.57)	(3.57)	(3.57)	(3.57)
STA seepage pump station demolition cost	(0.16)	(0.16)	(0.16)	(0.16)	(0.16)	(0.09)	(0.09)	(0.09)	(0.09)	(0.09)
FEB seepage pump station demolition cost	0.00	0.00	0.00	0.00	0.00	0.00	0.00	0.00	0.00	0.00
Treatment plant influent pump station demolition cost	0.00	(0.08)	(0.17)	(0.30)	(0.69)	0.00	(0.08)	(0.18)	(0.35)	(0.81)
Treatment plant demolition cost	0.00	(2.25)	(2.98)	(4.00)	(7.18)	0.00	(2.27)	(3.07)	(4.41)	(8.11)
Effluent pump station demolition cost	(3.57)	(3.57)	(3.57)	(3.57)	(3.57)	(3.57)	(3.57)	(3.57)	(3.57)	(3.57)
STA restoration cost	(4.08)	(4.08)	(4.08)	(4.08)	(4.08)	(3.01)	(3.01)	(3.01)	(3.01)	(3.01)
FEB restoration cost	0.00	0.00	0.00	0.00	0.00	0.00	0.00	0.00	0.00	0.00
Sludge land restoration cost	0.00	0.00	0.00	0.00	0.00	0.00	0.00	0.00	0.00	0.00
STA land value	0.00	0.00	0.00	0.00	0.00	0.00	0.00	0.00	0.00	0.00
FEB land value	0.00	0.00	0.00	0.00	0.00	0.00	0.00	0.00	0.00	0.00
Treatment plant land value	0.00	0.00	0.00	0.00	0.00	0.00	0.00	0.00	0.00	0.00
Sludge land value	0.00	0.00	0.00	0.00	0.00	0.00	0.00	0.00	0.00	0.00
Net Salvage Value	(11.39)	(13.72)	(14.54)	(15.69)	(19.26)	(10.25)	(12.60)	(13.50)	(15.00)	(19.16)
Present Worth - Salvage Value	(1.60)	(1.93)	(2.05)	(2.21)	(2.71)	(1.44)	(1.77)	(1.90)	(2.11)	(2.70)
50 - Year Present Worth, $ million										
Capital Cost	125.80	143.42	150.56	160.14	186.53	91.02	108.76	116.62	128.56	158.89
O&M Cost	36.40	67.42	90.36	115.55	142.41	33.11	64.13	88.76	113.38	138.00
Replacement Cost	3.50	5.75	6.63	7.82	11.22	3.43	5.70	6.67	8.17	12.10
Salvage Value	1.60	1.93	2.05	2.21	2.71	1.44	1.77	1.90	2.11	2.70
Total	167.30	218.52	249.60	285.71	342.87	129.00	180.36	213.94	252.22	311.68
Present worth, $/million gallons treated	48.50	63.35	72.36	82.83	99.40	37.40	52.29	62.02	73.12	90.36
Present worth, $/pound P removed	58.16	69.06	72.31	76.40	85.14	112.11	125.40	123.95	125.25	135.44

Present Worth Calculations for STA - Chemical Treatment/Direct Filtration
(Salvage Value = purchase price)

Parameter	Influent/Effluent P Levels									
	150/50	150/40	150/30	150/20	150/10	90/50	90/40	90/30	90/20	90/10
Basis of Design										
Influent PS capacity, mgd	2330	2330	2330	2330	2330	2330	2330	2330	2330	2330
Influent PS average flow, mgd	189	189	189	189	189	189	189	189	189	189
STA area, acres	7410	7410	7410	7410	7410	4040	4040	4040	4040	4040
FEB area, acres	0	0	0	0	0	0	0	0	0	0
Treatment plant influent PS capacity, mgd	0	42	89	155	360	0	43	95	181	420
Treatment plant influent PS average flow, mgd	0	42	83	128	176	0	42	86	130	174
Treatment plant land area, acres	0	9	17	27	37	0	9	18	27	37
Sludge disposal area, acres	0	88	174	269	370	0	88	181	273	365
Effluent PS capacity, mgd	2330	2330	2330	2330	2330	2330	2330	2330	2330	2330
Effluent PS average flow, mgd	189	189	189	189	189	189	189	189	189	189
Total land area, acres	8,151	8,258	8,362	8,476	8,598	4,444	4,551	4,663	4,774	4,886
Capital Costs, $ million										
Influent pumping station	17.87	17.87	17.87	17.87	17.87	17.87	17.87	17.87	17.87	17.87
STA	33.96	33.96	33.96	33.96	33.96	18.52	18.52	18.52	18.52	18.52
STA seepage pump station	0.78	0.78	0.78	0.78	0.78	0.43	0.43	0.43	0.43	0.43
FEB	0.00	0.00	0.00	0.00	0.00	0.00	0.00	0.00	0.00	0.00
FEB seepage pump station	0.00	0.00	0.00	0.00	0.00	0.00	0.00	0.00	0.00	0.00
Treatment plant influent pump station	0.00	0.40	0.85	1.49	3.45	0.00	0.41	0.91	1.74	4.03
Treatment plant	0.00	11.26	14.90	20.01	35.90	0.00	11.33	15.36	22.03	40.55
Sludge treatment and disposal	0.00	0.84	1.66	2.56	3.52	0.00	0.84	1.72	2.60	3.48
Effluent pump station	17.87	17.87	17.87	17.87	17.87	17.87	17.87	17.87	17.87	17.87
Subtotal	70.49	82.98	87.90	94.55	113.36	54.68	67.27	72.68	81.05	102.74
Construction contingencies (20 percent)	14.10	16.60	17.58	18.91	22.67	10.94	13.45	14.54	16.21	20.55
Subtotal, construction costs	84.58	99.58	105.48	113.45	136.03	65.62	80.72	87.21	97.26	123.29
Engineering (15 percent)	12.69	14.94	15.82	17.02	20.40	9.84	12.11	13.08	14.59	18.49
Land purchase - STA	28.53	28.53	28.53	28.53	28.53	15.55	15.55	15.55	15.55	15.55
Land purchase - FEB	0.00	0.00	0.00	0.00	0.00	0.00	0.00	0.00	0.00	0.00
Land purchase - treatment plant	0.00	0.03	0.07	0.10	0.14	0.00	0.03	0.07	0.11	0.14
Land purchase - sludge disposal	0.00	0.34	0.67	1.03	1.42	0.00	0.34	0.70	1.05	1.41
Total Capital Cost	125.80	143.42	150.56	160.14	186.53	91.02	108.76	116.62	128.56	158.89
Present Worth - Capital Cost	125.80	143.42	150.56	160.14	186.53	91.02	108.76	116.62	128.56	158.89
O&M Costs, $ million/yr										
Influent pumping station	0.52	0.52	0.52	0.52	0.52	0.52	0.52	0.52	0.52	0.52
STA	0.22	0.22	0.22	0.22	0.22	0.12	0.12	0.12	0.12	0.12
STA seepage pump station	0.12	0.12	0.12	0.12	0.12	0.07	0.07	0.07	0.07	0.07
STA sampling and monitoring	0.30	0.30	0.30	0.30	0.30	0.30	0.30	0.30	0.30	0.30
FEB	0.00	0.00	0.00	0.00	0.00	0.00	0.00	0.00	0.00	0.00
FEB seepage pump station	0.00	0.00	0.00	0.00	0.00	0.00	0.00	0.00	0.00	0.00
Treatment plant influent pump station	0.00	0.26	0.32	0.38	0.45	0.00	0.26	0.32	0.38	0.44
Chemicals	0.00	0.73	1.44	2.23	3.06	0.00	0.73	1.50	2.26	3.03
Sludge treatment and disposal	0.00	0.05	0.10	0.15	0.20	0.00	0.05	0.10	0.15	0.20
Other treatment plant O&M	0.00	0.26	0.51	0.78	1.07	0.00	0.26	0.52	0.79	1.06
Treatment plant sampling and monitoring	0.00	0.15	0.15	0.15	0.15	0.00	0.15	0.15	0.15	0.15
Effluent pump station	0.52	0.52	0.52	0.52	0.52	0.52	0.52	0.52	0.52	0.52
Total Annual O&M Cost	1.69	3.14	4.21	5.38	6.63	1.54	2.99	4.13	5.28	6.42
Present Worth - Annual O&M Cost	36.40	67.42	90.36	115.55	142.41	33.11	64.13	88.76	113.38	138.00
Present Worth - Replacement Costs, $million										
Influent pump station	1.68	1.68	1.68	1.68	1.68	1.68	1.68	1.68	1.68	1.68
STA seepage pump station	0.15	0.15	0.15	0.15	0.15	0.08	0.08	0.08	0.08	0.08
FEB seepage pump station	0.00	0.00	0.00	0.00	0.00	0.00	0.00	0.00	0.00	0.00
Treatment plant influent pump station	0.00	0.08	0.16	0.28	0.65	0.00	0.08	0.17	0.33	0.76
Chemical feed system	0.00	0.16	0.22	0.29	0.53	0.00	0.17	0.22	0.32	0.59
Other major treatment plant equipment	0.00	1.87	2.48	3.33	5.97	0.00	1.88	2.55	3.66	6.74
Sludge treatment and disposal	0.00	0.14	0.28	0.43	0.58	0.00	0.14	0.29	0.43	0.58
Effluent pump station	1.68	1.68	1.68	1.68	1.68	1.68	1.68	1.68	1.68	1.68
Total Present Worth - Replacement Costs	3.50	5.75	6.63	7.82	11.22	3.43	5.70	6.67	8.17	12.10
Salvage Value, $ million										
Influent pump station demolition cost	(3.57)	(3.57)	(3.57)	(3.57)	(3.57)	(3.57)	(3.57)	(3.57)	(3.57)	(3.57)
STA seepage pump station demolition cost	(0.16)	(0.16)	(0.16)	(0.16)	(0.16)	(0.09)	(0.09)	(0.09)	(0.09)	(0.09)
FEB seepage pump station demolition cost	0.00	0.00	0.00	0.00	0.00	0.00	0.00	0.00	0.00	0.00
Treatment plant influent pump station demolition cost	0.00	(0.08)	(0.17)	(0.30)	(0.69)	0.00	(0.08)	(0.18)	(0.35)	(0.81)
Treatment plant demolition cost	0.00	(2.25)	(2.98)	(4.00)	(7.18)	0.00	(2.27)	(3.07)	(4.41)	(8.11)
Effluent pump station demolition cost	(3.57)	(3.57)	(3.57)	(3.57)	(3.57)	(3.57)	(3.57)	(3.57)	(3.57)	(3.57)
STA restoration cost	(4.08)	(4.08)	(4.08)	(4.08)	(4.08)	(3.01)	(3.01)	(3.01)	(3.01)	(3.01)
FEB restoration cost	0.00	0.00	0.00	0.00	0.00	0.00	0.00	0.00	0.00	0.00
Sludge land restoration cost	0.00	0.00	0.00	0.00	0.00	0.00	0.00	0.00	0.00	0.00
STA land value	28.53	28.53	28.53	28.53	28.53	15.55	15.55	15.55	15.55	15.55
FEB land value	0.00	0.00	0.00	0.00	0.00	0.00	0.00	0.00	0.00	0.00
Treatment plant land value	0.00	0.03	0.07	0.10	0.14	0.00	0.03	0.07	0.11	0.14
Sludge land value	0.00	0.00	0.00	0.00	0.00	0.00	0.00	0.00	0.00	0.00
Net Salvage Value	17.14	14.84	14.06	12.94	9.41	5.31	2.99	2.12	0.66	(3.47)
Present Worth - Salvage Value	2.41	2.09	1.98	1.82	1.32	0.75	0.42	0.30	0.09	(0.49)
50 - Year Present Worth, $ million										
Capital Cost	125.80	143.42	150.56	160.14	186.53	91.02	108.76	116.62	128.56	158.89
O&M Cost	36.40	67.42	90.36	115.55	142.41	33.11	64.13	88.76	113.38	138.00
Replacement Cost	3.50	5.75	6.63	7.82	11.22	3.43	5.70	6.67	8.17	12.10
Salvage Value	(2.41)	(2.09)	(1.98)	(1.82)	(1.32)	(0.75)	(0.42)	(0.30)	(0.09)	0.49
Total	163.28	214.50	245.58	281.69	338.83	126.81	178.17	211.74	250.02	309.47
Present worth, $/million gallons treated	47.34	62.19	71.20	81.67	98.23	36.77	51.65	61.39	72.48	89.72
Present worth, $/pound P removed	56.76	67.79	71.14	75.32	84.13	110.21	123.87	122.67	124.16	134.48

f:\3807\salvage\STAOFPP.xls

Present Worth Calculations for STA - Chemical Treatment/Direct Filtration
(Salvage Value = purchase price + 2.8% inflation)

Parameter	Influent/Effluent P Levels									
	150/50	150/40	150/30	150/20	150/10	90/50	90/40	90/30	90/20	90/10
Basis of Design										
Influent PS capacity, mgd	2330	2330	2330	2330	2330	2330	2330	2330	2330	2330
Influent PS average flow, mgd	189	189	189	189	189	189	189	189	189	189
STA area, acres	7410	7410	7410	7410	7410	4040	4040	4040	4040	4040
FEB area, acres	0	0	0	0	0	0	0	0	0	0
Treatment plant influent PS capacity, mgd	0	42	89	155	360	0	43	95	181	420
Treatment plant influent PS average flow, mgd	0	42	83	128	176	0	42	86	130	174
Treatment plant land area, acres	0	9	17	27	37	0	9	18	27	37
Sludge disposal area, acres	0	88	174	269	370	0	88	181	273	365
Effluent PS capacity, mgd	2330	2330	2330	2330	2330	2330	2330	2330	2330	2330
Effluent PS average flow, mgd	189	189	189	189	189	189	189	189	189	189
Total land area, acres	8,151	8,258	8,362	8,476	8,598	4,444	4,551	4,663	4,774	4,886
Capital Costs, $ million										
Influent pumping station	17.87	17.87	17.87	17.87	17.87	17.87	17.87	17.87	17.87	17.87
STA	33.96	33.96	33.96	33.96	33.96	18.52	18.52	18.52	18.52	18.52
STA seepage pump station	0.78	0.78	0.78	0.78	0.78	0.43	0.43	0.43	0.43	0.43
FEB	0.00	0.00	0.00	0.00	0.00	0.00	0.00	0.00	0.00	0.00
FEB seepage pump station	0.00	0.00	0.00	0.00	0.00	0.00	0.00	0.00	0.00	0.00
Treatment plant influent pump station	0.00	0.40	0.85	1.49	3.45	0.00	0.41	0.91	1.74	4.03
Treatment plant	0.00	11.26	14.90	20.01	35.90	0.00	11.33	15.36	22.03	40.55
Sludge treatment and disposal	0.00	0.84	1.66	2.56	3.52	0.00	0.84	1.72	2.60	3.48
Effluent pump station	17.87	17.87	17.87	17.87	17.87	17.87	17.87	17.87	17.87	17.87
Subtotal	70.49	82.98	87.90	94.55	113.36	54.68	67.27	72.68	81.05	102.74
Construction contingencies (20 percent)	14.10	16.60	17.58	18.91	22.67	10.94	13.45	14.54	16.21	20.55
Subtotal, construction costs	84.58	99.58	105.48	113.45	136.03	65.62	80.72	87.21	97.26	123.29
Engineering (15 percent)	12.69	14.94	15.82	17.02	20.40	9.84	12.11	13.08	14.59	18.49
Land purchase - STA	28.53	28.53	28.53	28.53	28.53	15.55	15.55	15.55	15.55	15.55
Land purchase - FEB	0.00	0.00	0.00	0.00	0.00	0.00	0.00	0.00	0.00	0.00
Land purchase - treatment plant	0.00	0.03	0.07	0.10	0.14	0.00	0.03	0.07	0.11	0.14
Land purchase - sludge disposal	0.00	0.34	0.67	1.03	1.42	0.00	0.34	0.70	1.05	1.41
Total Capital Cost	125.80	143.42	150.56	160.14	186.53	91.02	108.76	116.62	128.56	158.89
Present Worth - Capital Cost	125.80	143.42	150.56	160.14	186.53	91.02	108.76	116.62	128.56	158.89
O&M Costs, $ million/yr										
Influent pumping station	0.52	0.52	0.52	0.52	0.52	0.52	0.52	0.52	0.52	0.52
STA	0.22	0.22	0.22	0.22	0.22	0.12	0.12	0.12	0.12	0.12
STA seepage pump station	0.12	0.12	0.12	0.12	0.12	0.07	0.07	0.07	0.07	0.07
STA sampling and monitoring	0.30	0.30	0.30	0.30	0.30	0.30	0.30	0.30	0.30	0.30
FEB	0.00	0.00	0.00	0.00	0.00	0.00	0.00	0.00	0.00	0.00
FEB seepage pump station	0.00	0.00	0.00	0.00	0.00	0.00	0.00	0.00	0.00	0.00
Treatment plant influent pump station	0.00	0.26	0.32	0.38	0.45	0.00	0.26	0.32	0.38	0.44
Chemicals	0.00	0.73	1.44	2.23	3.06	0.00	0.73	1.50	2.26	3.03
Sludge treatment and disposal	0.00	0.05	0.10	0.15	0.20	0.00	0.05	0.10	0.15	0.20
Other treatment plant O&M	0.00	0.26	0.51	0.78	1.07	0.00	0.26	0.52	0.79	1.06
Treatment plant sampling and monitoring	0.00	0.15	0.15	0.15	0.15	0.00	0.15	0.15	0.15	0.15
Effluent pump station	0.52	0.52	0.52	0.52	0.52	0.52	0.52	0.52	0.52	0.52
Total Annual O&M Cost	1.69	3.14	4.21	5.38	6.63	1.54	2.99	4.13	5.28	6.42
Present Worth - Annual O&M Cost	36.40	67.42	90.36	115.55	142.41	33.11	64.13	88.76	113.38	138.00
Present Worth - Replacement Costs, $million										
Influent pump station	1.68	1.68	1.68	1.68	1.68	1.68	1.68	1.68	1.68	1.68
STA seepage pump station	0.15	0.15	0.15	0.15	0.15	0.08	0.08	0.08	0.08	0.08
FEB seepage pump station	0.00	0.00	0.00	0.00	0.00	0.00	0.00	0.00	0.00	0.00
Treatment plant influent pump station	0.00	0.08	0.16	0.28	0.65	0.00	0.08	0.17	0.33	0.76
Chemical feed system	0.00	0.16	0.22	0.29	0.53	0.00	0.17	0.22	0.32	0.59
Other major treatment plant equipment	0.00	1.87	2.48	3.33	5.97	0.00	1.88	2.55	3.66	6.74
Sludge treatment and disposal	0.00	0.14	0.28	0.43	0.58	0.00	0.14	0.29	0.43	0.58
Effluent pump station	1.68	1.68	1.68	1.68	1.68	1.68	1.68	1.68	1.68	1.68
Total Present Worth - Replacement Costs	3.50	5.75	6.63	7.82	11.22	3.43	5.70	6.67	8.17	12.10
Salvage Value, $ million										
Influent pump station demolition cost	(3.57)	(3.57)	(3.57)	(3.57)	(3.57)	(3.57)	(3.57)	(3.57)	(3.57)	(3.57)
STA seepage pump station demolition cost	(0.16)	(0.16)	(0.16)	(0.16)	(0.16)	(0.09)	(0.09)	(0.09)	(0.09)	(0.09)
FEB seepage pump station demolition cost	0.00	0.00	0.00	0.00	0.00	0.00	0.00	0.00	0.00	0.00
Treatment plant influent pump station demolition cost	0.00	(0.08)	(0.17)	(0.30)	(0.69)	0.00	(0.08)	(0.18)	(0.35)	(0.81)
Treatment plant demolition cost	0.00	(2.25)	(2.98)	(4.00)	(7.18)	0.00	(2.27)	(3.07)	(4.41)	(8.11)
Effluent pump station demolition cost	(3.57)	(3.57)	(3.57)	(3.57)	(3.57)	(3.57)	(3.57)	(3.57)	(3.57)	(3.57)
STA restoration cost	(4.08)	(4.08)	(4.08)	(4.08)	(4.08)	(3.01)	(3.01)	(3.01)	(3.01)	(3.01)
FEB restoration cost	0.00	0.00	0.00	0.00	0.00	0.00	0.00	0.00	0.00	0.00
Sludge land restoration cost	0.00	0.00	0.00	0.00	0.00	0.00	0.00	0.00	0.00	0.00
STA land value	113.48	113.48	113.48	113.48	113.48	61.87	61.87	61.87	61.87	61.87
FEB land value	0.00	0.00	0.00	0.00	0.00	0.00	0.00	0.00	0.00	0.00
Treatment plant land value	0.00	0.14	0.27	0.41	0.57	0.00	0.14	0.28	0.42	0.56
Sludge land value	0.00	1.35	2.67	4.12	5.66	0.00	1.35	2.77	4.18	5.60
Net Salvage Value	102.10	101.25	101.88	102.32	100.45	51.62	50.76	51.41	51.47	48.86
Present Worth - Salvage Value	14.37	14.25	14.34	14.40	14.13	7.26	7.14	7.23	7.24	6.88
50 - Year Present Worth, $ million										
Capital Cost	125.80	143.42	150.56	160.14	186.53	91.02	108.76	116.62	128.56	158.89
O&M Cost	36.40	67.42	90.36	115.55	142.41	33.11	64.13	88.76	113.38	138.00
Replacement Cost	3.50	5.75	6.63	7.82	11.22	3.43	5.70	6.67	8.17	12.10
Salvage Value	(14.37)	(14.25)	(14.34)	(14.40)	(14.13)	(7.26)	(7.14)	(7.23)	(7.24)	(6.88)
Total	151.33	202.34	233.22	269.11	326.02	120.30	171.45	204.80	242.87	302.11
Present worth, $/million gallons treated	43.87	58.66	67.61	78.02	94.52	34.88	49.71	59.39	70.41	87.59
Present worth, $/pound P removed	52.61	63.94	67.56	71.96	80.95	104.55	119.20	118.66	120.61	131.28

f:\0807\salvage\STADFPPL.xls