SOUTH FLORIDA WATER MANAGEMENT DISTRICT

SUMMARY OF STA VEGETATION MANAGEMENT PRACTICES

Prepared by

Gary Goforth, Inc.
February 2005

TABLE OF CONTENTS

1 Executive Summary 1-1
2 Introduction 2-1
3 STA-1E 3-1
3.1 Design Considerations 3-1
3.2 Construction 3-3
3.3 Start-up 3-3
3.4 Normal operations 3-4
3.5 STA Enhancements 3-5
4 STA-1W 4-1
4.1 Design Considerations 4-1
4.2 Construction 4-4
4.3 Start-up 4-5
4.4 Normal operations 4-6
4.5 STA Enhancements 4-8
5 STA-2 5-1
5.1 Design Considerations 5-1
5.2 Construction 5-1
5.3 Start-up 5-2
5.4 Normal operations 5-3
5.5 STA Enhancements 5-6
6 STA-3/4 6-1
6.1 Design Considerations 6-2
6.2 Construction 6-2
6.3 Start-up 6-3
6.4 Normal operations 6-5
6.5 STA Enhancements 6-6
7 STA-5 7-1
7.1 Design Considerations 7-1
7.2 Construction 7-2
7.3 Start-up 7-2
7.4 Normal operations 7-3
7.5 STA Enhancements 7-6
8 STA-6 8-1
8.1 Design Considerations 8-1
8.2 Construction 8-1
8.3 Start-up 8-1
8.4 Normal operations 8-3
8.5 STA Enhancements 8-6
9 Summary 9-1

10. References 10-1

1 Executive Summary

Effective management of both desirable and undesirable vegetation within the Stormwater Treatment Areas (STAs) is critical to achieving and sustaining long-term phosphorus reduction goals for the Everglades. The South Florida Water Management District (District) has amassed what is arguably the most comprehensive experience and knowledge base of vegetation management in large-scale treatment wetlands, developed over the last fifteen years.

Consideration of vegetation management activities was incorporated into the STA design phase, while field activities begin with land acquisition and extended through construction, start-up (i.e., after initial inundation and before flow-through operation), and normal operation and maintenance phases. As the District implements the STA enhancements described in the *Long-Term Plan for Achieving Water Quality Goals, Everglades Protection Area Tributary Basins* (Long-Term Plan, SFWMD 2004), the lessons learned from prior vegetation management activities will be evaluated and refined in order to convert approximately 10,000 acres of emergent vegetation to submerged aquatic vegetation (SAV). In order to assist with this evaluation process, and to serve as a preliminary "lessons learned" of vegetation management practices, this report summarizes many of the various activities used to manage vegetation communities within the STAs over the last fifteen years.

Key findings are summarized below.

- The most timely and effective growth of treatment vegetation occurred when vegetation management was explicitly considered during the design phase, e.g., to insist that the construction contractor retain dewatering volumes on site during construction of STA-3/4.
- Land preparation prior to initial inundation appeared to be the most dominant factor in effectively establishing desirable vegetation communities in the STA prior to flow-through operations. Site-specific factors such as antecedent crop type (and associated fertilizer practice), soil type and depth, and ability to control water levels, influenced the effectiveness of the various land preparation techniques.
- The most effective control of non-desirable vegetation was achieved through proactive vegetation management, i.e., keeping problems from getting out of hand, beginning soon after the land was acquired, and continuing through normal operations and maintenance. This was particularly critical for floating aquatic vegetation (FAV).

Future considerations:

- For future STAs, site-specific combinations of mowing, judicial application of herbicide, and burning appears to be the most effective vegetation practices prior to inundation.

- For those treatment cells presently in emergent communities and scheduled for conversion to SAV, a combination of mowing, judicial application of herbicide, and burning may be effective to remove the existing biomass. Where cost effective, aerial transport of SAV from nearby donor sites (free of hydrilla) may be effective in rapidly establishing the desirable SAV community.
- A mosaic of vegetation communities (i.e., mixed marsh of emergent and SAV vegetation) may be more desirable than a monoculture of, say, SAV. This diversity may increase the resiliency of the cells to upset, such as occurred in Cell 5 of STA-1W during the September 2004 hurricanes. Determining the proper mix will require additional investigations. In the interim, strips of emergent vegetation 40-50 feet wide and spaced 500 – 1000 feet on center, or adjacent to remnant roads/canals, are being left in those cells being converted from emergent to SAV.
- Tussocks (i.e., rooted vegetation floating on peat rafts) should be removed whenever possible. Removal by draglines was slow but effective, and limited to the reach of the boom. Draglines positioned nearby for use during opportune work periods by field station staff may be desirable. On-site storage for dewatering prior to transport off-site (perhaps to adjacent farmers) should be further evaluated.
- Disturbance management (e.g., by fire, draw down, harvesting) may yield more robust and resilient vegetation, which may lead to improved performance. Periodic draw down may also consolidate the floc layer and peat.
- Vegetation management plans should be completed for each STA. They should be reviewed annually and updated as needed.
- Despite the comprehensive experience base developed over the last fifteen years, additional scientific and practical questions remain, hence, there is a continuing need for active science-based investigations of various vegetation management practices to further evaluate the most effective means to achieve and maintain the long-term water quality goals for the Everglades STAs.

Acknowledgements. The author gratefully acknowledges the contributions of numerous District staff to this compilation of vegetation management activities. Information was gained through staff interviews, previous reports and other documents, as well as through on-going activities. Every effort was made to cite specific references provided by staff, however, inadvertent omissions may have occurred, and corrections will be made once they are brought to my attention.

It is intended that this initial documentation of vegetation management practices be periodically updated as new information is gained.

2 Introduction

The South Florida Water Management District (District), in partnership with other state and federal agencies and stakeholders, is undertaking one of the largest ecosystem restoration programs in the world. Florida's 1994 Everglades Forever Act (Act) set into action a plan for restoring a significant portion of the remaining 618,000-ha Everglades ecosystem through a program of construction, research, and regulation activities. The Act addressed water quality, water quantity (including hydroperiod), and the invasion of exotic plant species in the Everglades ecosystem. The Act also establishes both interim and long-term water quality goals to ultimately achieve restoration and preservation of the Everglades. The interim goal of the restoration program is to reduce phosphorus (P) concentrations entering the Everglades to 50 parts per billion (ppb). The foundation of the interim phosphorus control program is the Everglades Construction Project (ECP) which encompasses six strategically located constructed wetlands, referred to as Stormwater Treatment Areas, or STAs (see Figure 2-1). In addition to the STAs, significant phosphorus load reductions have been achieved through best management practices (BMPs) within the adjacent Everglades Agricultural Area (EAA). The long-term goal is to combine point-source, basin-level and regional solutions in a system-wide approach to ensure that all waters discharged to the Everglades Protection Area achieve final water quality goals by December 31, 2006. With respect to nutrients, the long-term goal is to reduce nutrient discharges to levels that do not cause an imbalance in natural populations of aquatic flora or fauna, recently interpreted to be 10 ppb win the Everglades Protection Area (EPA). Additional background information can be found in Chimney and Goforth (2000).

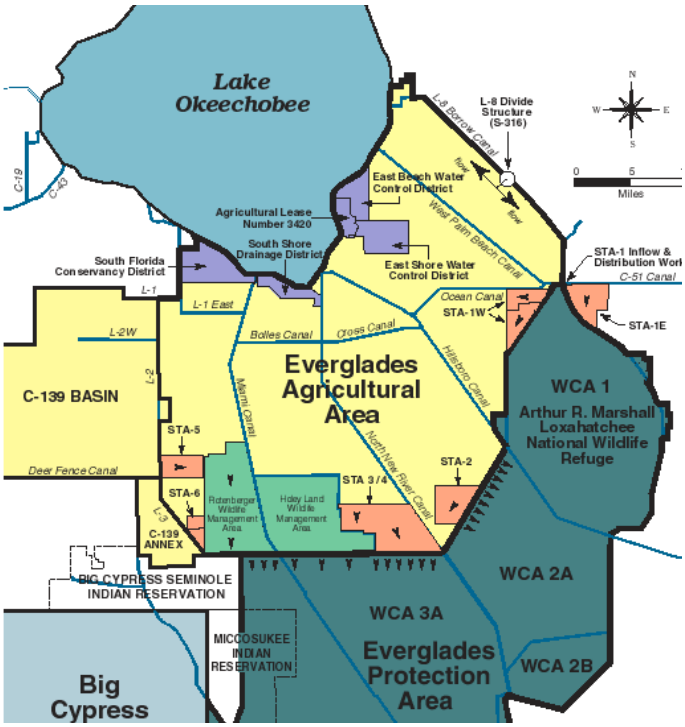

Figure 2-1. Overview of the Everglades Construction Project

Effective management of both desirable and non-desirable vegetation within the Stormwater Treatment Areas (STAs) is critical to achieving and sustaining long-term phosphorus reduction goals for the Everglades. The District has amassed what is arguably the most comprehensive experience and knowledge base of vegetation management in large-scale treatment wetland, developed over the last fifteen years.

For the purpose of this report, vegetation management activities for each STA were compiled in five distinct phases, each with distinct management goals for both desirable and un-desirable species:

1. **Design phase** – extending from the time of land acquisition and extending to the commencement of construction. Vegetation management activities may include
    a. control of exotic plants (melalueca, Brazilian pepper, etc.),
    b. temporary lease back to previous land manager
    c. flooding to promote wetland vegetation prior to construction

2. **Construction phase** – from commencement of construction up until initial inundation (acknowledging that construction activities may continue beyond inundation). Vegetation management activities may include
    a. temporary lease back to previous land manager
    b. herbicide control of exotic plants (melalueca, Brazilian pepper, etc.),
    c. herbicide existing vegetation
    d. leave existing vegetation (either in strips perpendicular to flow, or in entirety)
    e. disking, mowing or use of roller chopper
    f. physical removal of citrus trees
    g. dewatering on-site (preferred) or off-site
    h. flooding to promote wetland vegetation by volunteer recruitment
    i. planting desirable wetland vegetation
    j. earthwork activities to level out steeply sloping areas
    k. plugging or filling in (preferred) canals that are parallel to intended flow path, while leaving those that are perpendicular to the intended flow path

3. **Start-up phase** - beginning with initial inundation and extending to flow-through operation. Vegetation management activities may include
    a. herbicide application for control of undesirable species
    b. depth management to promote desirable vegetation
    c. transport of desirable species from donor sites

4. **Normal operation and maintenance phase** – commencing with flow-through operation of the STA treatment cell. Vegetation management activities may include
    a. depth management to promote desirable vegetation
    b. herbicide application for control of undesirable species,
    c. depth management to promote desirable vegetation, including periodic draw down
    d. physical removal (draglines, etc.) of floating mats
    e. chop floating mats, with and without removal
    f. periodic mechanical harvesting
    g. periodic gate opening for flushing SAV fragments to prevent build-up
    h. Periodic burning

5. **STA Enhancements phase –** activities associated with converting the existing emergent vegetation communities in specific treatment cells to SAV, as described in the Long-Term Plan. Vegetation management activities may include a combination of the activities described above for the other phases.

As the District implements the STA enhancements described in the Long-Term Plan, the lessons learned from prior vegetation management activities will be evaluated and refined in order to convert approximately 10,000 acres of emergent vegetation to submerged aquatic vegetation (SAV). In order to assist with this evaluation process, and to serve as a preliminary "lessons learned" of vegetation management practices, this report summarizes many of the various activities used to manage vegetation communities within the STAs over the last fifteen years. Two sources of information were consulted during the preparation of this report:

1. Interviews with various district staff
    a. Dan Thayer; Lou Toth and Dave Johnson
    b. Tom Kosier, Christy Combs, Neil Larson and LeRoy Rodgers

2. Review of published and unpublished District documents dating back to the "Conceptual Design, EAA Flow-way Research and Development Program" (Davis 1988).

The STAs are presently managed to promote two primary vegetation types:

1. emergent vegetation, including cattails (typha), arrowhead (sagittaria), pickerel weed (pontederia) and other mixed marsh species. A cattail marsh in STA-1W is shown in Figure 2-2.
2. submerged aquatic vegetation (SAV), including southern naiad, ceratophyllum, potamogeton, and hydrilla. An SAV system in STA-1W Cell 4 is shown in Figure 2-3.

A third general classification of vegetation important in the treatment process is periphyton, an assemblage of algae, bacteria and other microorganisms. Presently the District does not conduct any specific management activities for periphyton, as it grows throughout the STAs, most often in combination with SAV (see Figure 2-4). A large-scale demonstration project is under construction in STA-3/4 Cell 2B for a periphyton-based STA (PSTA), which will have specific vegetation management activities during construction, start-up, normal operation and maintenance. Figure 2-5 shows the 400-acre site prior to construction and during construction as the muck overburden is removed from the underlying limestone.

Figure 2-2. Emergent marsh in STA-1W.

Figure 2-3. An SAV system in STA-1W Cell 4.

Figure 2-4. Periphyton on SAV in STA-1W Cell 5B.

Figure 2-5. PSTA Demonstration site in Cell 2B of STA-3/4.

3 STA-1E

A schematic of STA-1E is presented in Figure 3-1, and an aerial photo of the STA is shown in Figure 3-2.

Figure 3-1. Schematic of STA-1E.

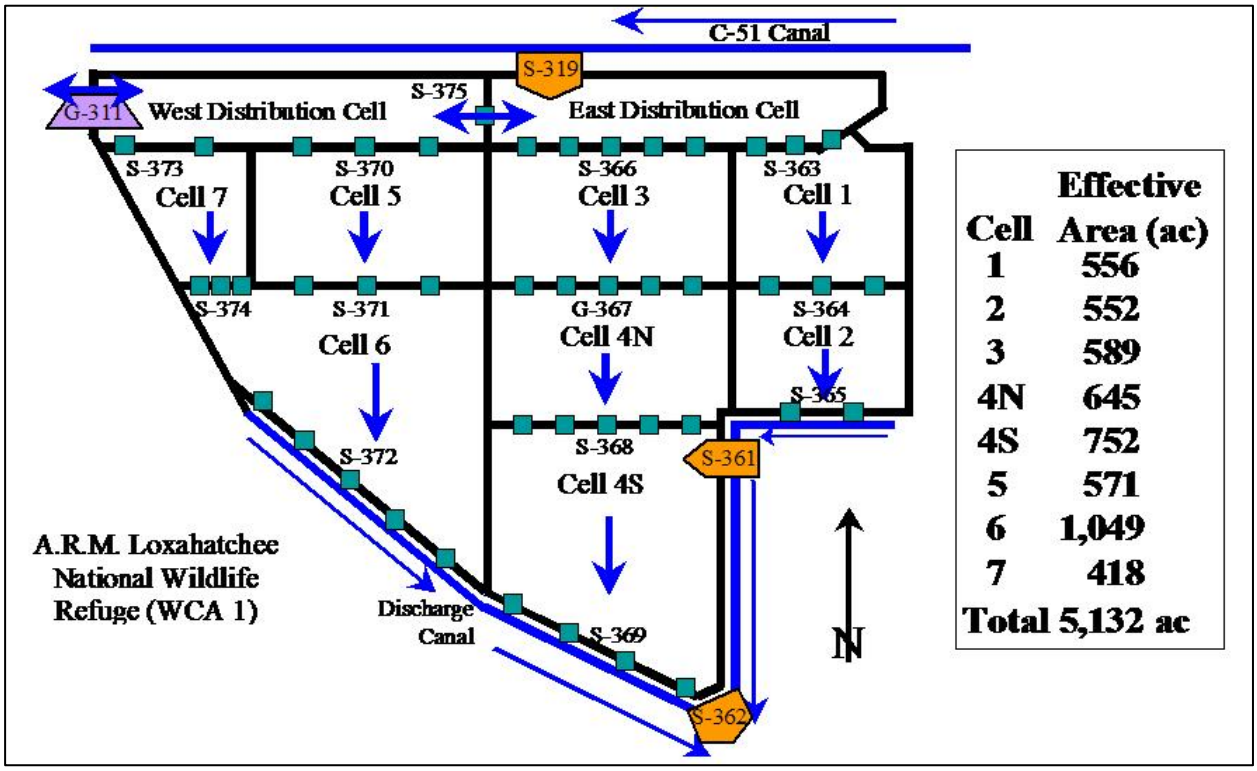

3.1 Design Considerations

STA-1E was designed by the U. S. Army Corps of Engineers as an emergent wetland treatment system. The relatively steep side slope on the existing land, roughly 7 feet from the northeast corner to the southwest corner, presented challenges during design and construction. Approximately 3 million cubic yards of earth were moved around the project in an attempt to minimize the slope within the treatment cells. Final survey elevations are not yet available, however, field observations suggest that several cells still have slopes greater than 1-2 feet within the cell, as indicated in Figure 3-3 of the western portion of Cell 7.

Figure 3-2. Aerial photo of STA-1E.

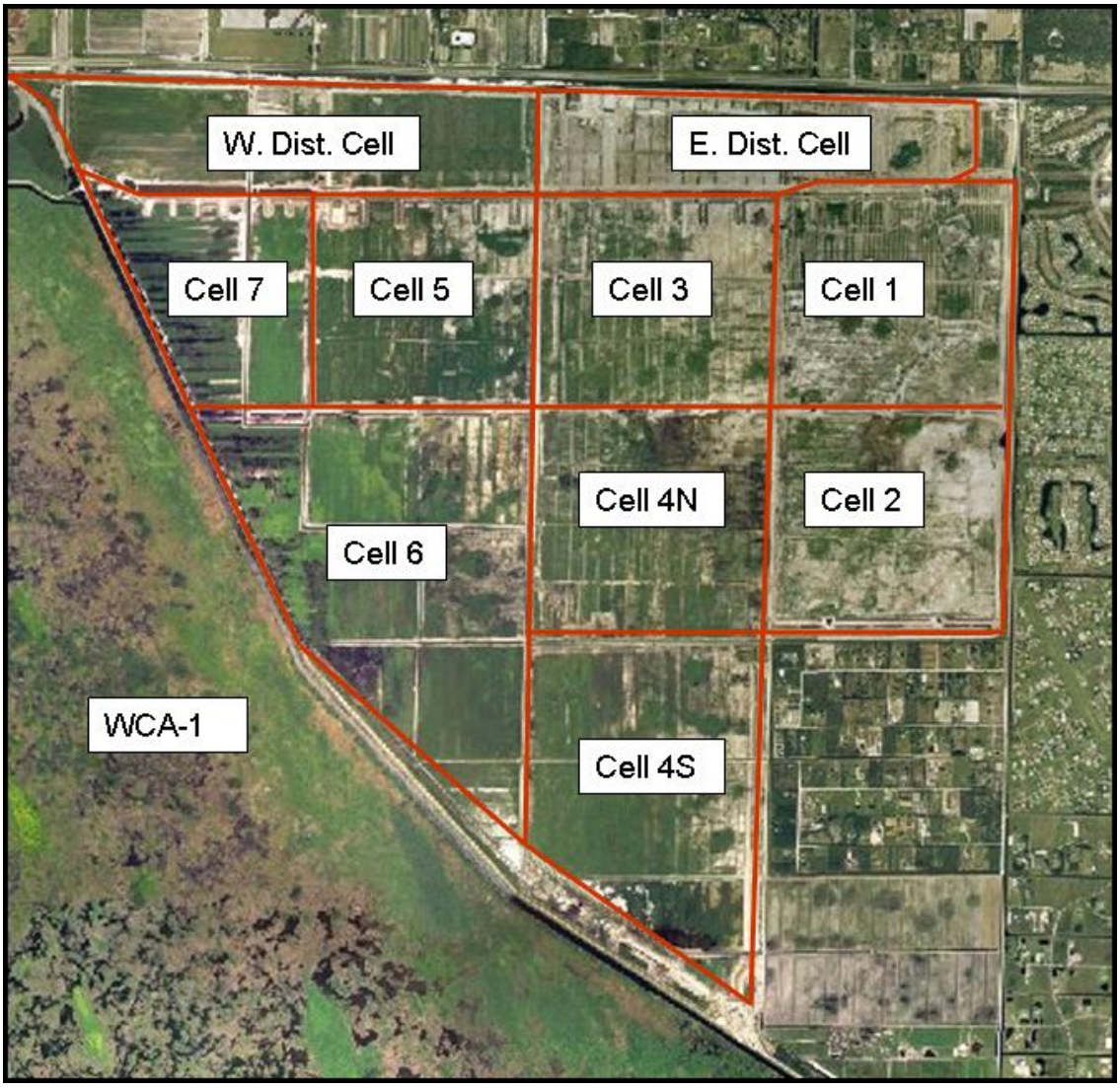

Figure 3-3. Photo of Cell 7.

3.2 Construction

During construction, dewatering flows were routed off-site, hence, there was very little wetland vegetation established when the project was deemed substantially complete by the Corps (June 2004 – see Figure 3-4). The re-contouring of the treatment cells during construction has likely altered the seed bank and soil chemistry (Serbesof-King 2004).

Figure 3-4. Aerial photo of STA-1E prior to substantial completion.

3.3 Start-up

A vegetation management plan was developed for STA-1E by District Staff which describes prior land use and pre-flooding vegetation (Serbesof-King 2004). This plan is an excellent model for the other STAs. Prior land uses within the STA-1E boundary included various agricultural activities including sugar cane, vegetable or row crops, citrus grove farming, small scale nurseries and homesteads (Serbesof-King 2004). Even though the STA has not yet been accepted by the District, the District is aggressively managing all the cells (except Cell 2 - the site of the proposed PSTA demonstration project) to establish the desired vegetation communities. The STA was used to control flooding in upstream basins during September and October, and continuous control of water levels for start-up was not possible. Torpedograss and paragrass comprise the dominant herbaceous species at the present time, approximately 5 months after initial inundation. In Cell 1, the District conducted herbicide application for the eradication of Brazilian pepper, Australian pine, and melalueca, and in December 2004 received authority from the Corps to inundate the cell. A portion of Cell 3 was mowed, but no herbicide was applied. Subsequent to the design of STA-1E, SAV was identified as a target community for cells 4N, 4S, and 6. A

combination of herbicide, mowing and water level manipulation is being implemented to eliminate the emergent vegetation and encourage SAV in these cells. Cells 4N and 4S were treated aerially with herbicide in preparation for the SAV start-up, and 40-ft wide strips of emergent vegetation were left in the SAV cells, as shown in Figure 3-5. Cell 4N was also mowed, and this reduction of the standing biomass apparently created more favorable conditions for SAV and periphyton. Observations indicate SAV is colonizing the cells. Cell 7 is receiving aerial and hand treatment with herbicide for the removal of melalueca. A summary of the management activities implemented during construction and start-up is provided in Table 3-1.

Figure 3-5. Strip of emergent vegetation within the SAV Cell 4S.

Table 3-1. Summary of Construction and Start-up Phase Vegetation Management

Cell	Target vegetation type	Land preparation	Construction Dewatering	Start-up operational management
1	Emergent	Removed trees; surface re-contoured	Off-site	Herbicide for exotics control Inundate to 1.0 ft
2	SAV & PSTA Demo	Removed trees; surface re-contoured	Off-site	None – under control of U.S. Army Corps of Engineers
3	Emergent	Removed trees; surface re-contoured	Off-site	A portion was mowed Inundate to 1.0 ft
4N	SAV	Removed trees; surface re-contoured	Off-site	Herbicide; mowed; left emergent strips; inundate to 2 feet
4S	SAV	Removed trees; surface re-contoured	Off-site	Herbicide; left emergent strips; inundate to 2 feet
5	Emergent	Removed trees; surface re-contoured	Off-site	Inundate to 1.0 ft
6	SAV	Removed trees; surface re-contoured	Off-site	Inundate to 2.0 ft
7	Emergent	Removed trees; surface re-contoured	Off-site	Herbicide for exotics control Inundate to 1.0 ft

3.4 Normal operations

Vegetation management activities in STA-1E are anticipated to follow the vegetation management plan. Target water levels will be maintained to sustain desirable vegetation, within the constraints of the existing ground elevation. Target depths:

- Emergent vegetation: 1.25 ft
- SAV: 1.5 ft +/-

Concepts of disturbance management, e.g., burning and draw down, are currently being added to the vegetation management tool kit. A proposal by Rodgers (2004) identifies several thousand acres for burning in the near future, including 418 acres in Cell 7. Draw down, and potential dry outs, may be investigated for P removal enhancements, vegetation health and soil consolidation benefits. A summary of existing vegetation in STA-1E is presented in Table 3-2.

3.5 STA Enhancements

A schematic of the enhanced STA-1E is presented in Figure 3-6. The planned enhancements to the STA consist of conversion of SAV in cells 4N, 4S and 6, however, the District is currently implementing the necessary management activities to achieve this target.

Table 3-2. Existing vegetation in STA-1E.

	Cell	Size of cell (acres)	Existing Vegetation Type
STA-1E	Distribution Cell	~1,000	Terrestrial emergents
	Cell 1	556	Terrestrial emergents
	Cell 2	552	Terrestrial emergents
	Cell 3	589	Establishing wetland emergents
	Cell 4N	645	Establishing SAV
	Cell 4S	752	Establishing SAV
	Cell 5	571	Establishing wetland emergents
	Cell 6	1,049	Establishing SAV
	Cell 7	418	Establishing wetland emergents

Figure 3-6. Schematic of STA-1E enhancements (not to scale).

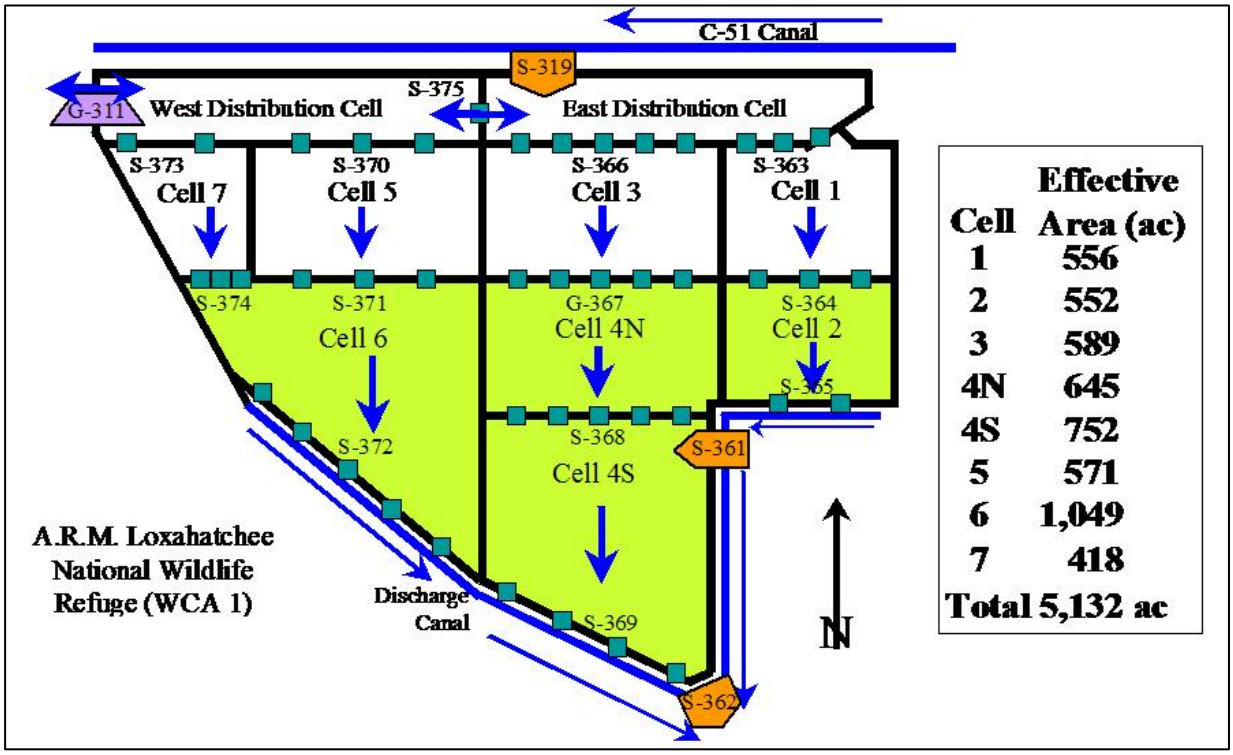

4 STA-1W

A schematic of STA-1W is presented in Figure 4-1, and a recent aerial photo of the STA is shown in Figure 4-2.

Figure 4-1. Schematic of STA-1W.

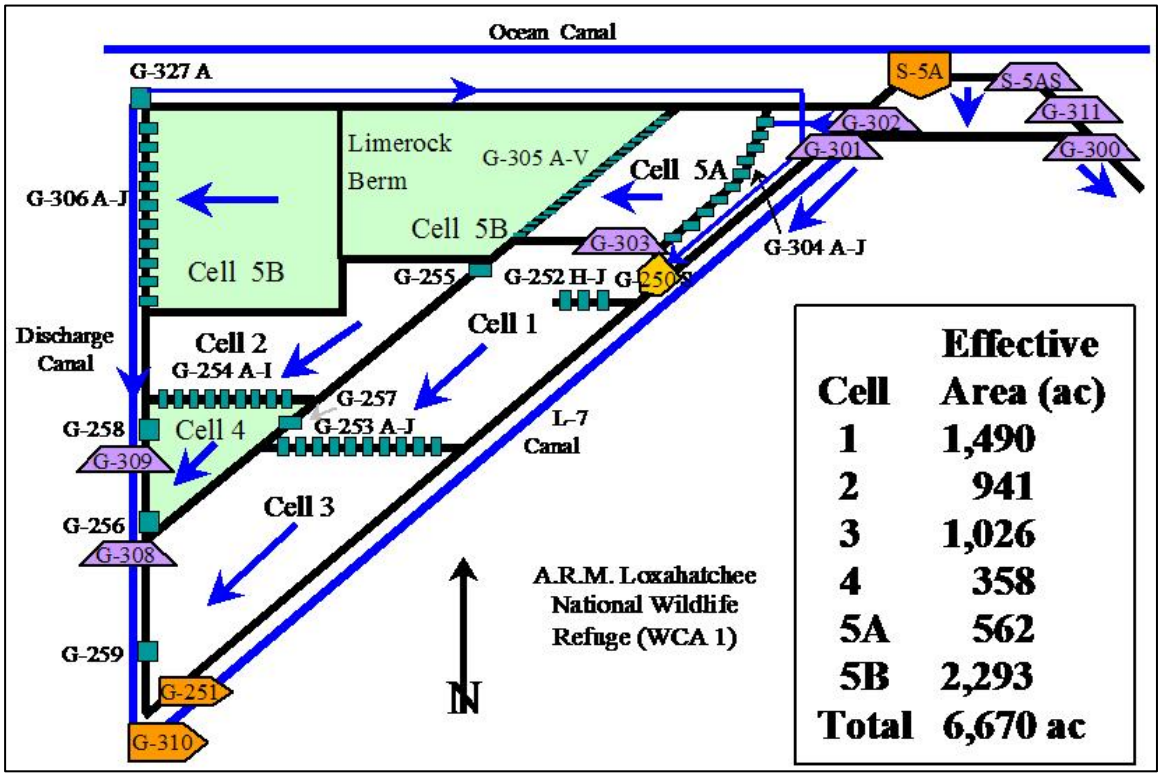

4.1 Design Considerations

Planning for the Everglades Nutrient Removal (ENR, the predecessor of STA-1W) began in 1988, shortly after the District sought State assistance in locating a site to develop a prototype constructed wetland for treatment of EAA runoff. This action came about from a series of staff recommendations to the Lake Okeechobee Technical Advisory Council (SFWMD 1986, LOTAC 1988). In September 1988 Gov. Martinez announced that the lease for a 3,742-acre tract of State-owned land adjacent to WCA-1 would not be renewed, but instead would be made available to the District. Working in concert with the Florida Department of Natural Resources, the District developed a proposal for converting the former agricultural land to a biological treatment system and subsequently entered into a management agreement with the Board of Trustees of the Internal Improvement Trust Fund to construct and operate the project (SFWMD 1991). Detailed histories of the ENR project are provided by Chimney and Goforth (in press) and Goforth et al. (1994), and the key vegetation management issues addressed during design are presented below.

Figure 4-2. Aerial photo of STA-1W (SFWMD 2004).

1. **Vegetation type.**
   The ENR was modeled after the monoculture cattail stands in WCA-2A, and the majority of the treatment cells were designed for emergent vegetation. Cell 4 was designed and managed as an "algal polishing cell."
2. **Establishing wetland vegetation**.
   a. **Planting vs. volunteer recruitment.** Faced with the potential need to plant almost 4,000 acres of wetland vegetation, the District established a 55-acre nursery on the property as a source of desirable species (bulrush, arrowhead and pickerelweed). During the subsequent permitting of the project, the Florida Department of Environmental Regulation required planting of over 800,000 plants in Cell 3 to further evaluate the need for planting in future treatment areas. Fortunately, planting was not required in later STAs.
   b. **Inundation.** During design of the ENR, the District implemented a phased approach to flooding the former agricultural lands. By the summer of 1989, 950 acres of former sugar cane were flooded to between 1-6 inches deep by the former farmer (Knight) to initiate the establishment of wetland vegetation species (SFWMD 1991). District staff believed the remnant sugar cane would die if flooded, so no vegetation management activity was implemented to kill and remove the cane biomass. However, the cane continued to grow, and in 1995 the District contracted with Knight to harvest it, but a hard freeze ruined the crop before the planned harvest. The cane area was later characterized as a "dead zone" due to the lack of volunteer recruitment of cattail or submerged wetland vegetation. An allelopathic property of sugar cane was later confirmed by Charles Wilson, U.S. Sugar Corporation that may explain this interaction between cane and other plants (Wilson 2004, personal communication).
3. **Active vegetation management to sustain the vegetation.**
   a. Physical management. The need to harvest, burn or disk the treatment vegetation was evaluated during the design of the project. Biomass harvesting was initially considered an integral activity to sustain the phosphorus removal in the ENR wetland (Davis 1988 and SFWMD 1991). However, this approach was abandoned given that (1) cattail is very aggressive and was likely to colonize the ENR without intensive management efforts; (2) removal of above-ground plant biomass in other wetlands did not significantly improve their overall treatment performance; (3) substantial physical disruption of the soil that would occur due to harvesting equipment; (Chimney and Goforth, in press).
   b. Hydroperiod management. Initially, it was felt that mimicking the region's natural wet/dry cycle with periodic marsh dry out, coupled with biomass harvesting, were essential to achieving phosphorus removal goals. This was not incorporated into practice with consideration that periodic dry out and reflooding would promote the release of sediment-bound phosphorus (Chimney and Goforth, in press).

4. **Land management for exotics control**. Establishing a precedent for future STA land management, the District entered into an agreement with the prior farmer, S. N. Knight, which allowed for a phased approach for continuation of farming prior to, and during, construction, during which time the farmer retained responsibility to manage the land to prevent exotic species intrusion.
5. **Treatment system hydraulics**
    a. **Resistance to flow.** During the design of the ENR project, there was very little direct experience with hydraulic resistance to flow in treatment wetlands due to vegetation. Discussions with the staff at St. Johns River Water Management District and other professionals indicated improper consideration of this resistance could seriously hinder treatment performance. Guardo et al. 1995 and Goforth 2000 discuss theoretical, modeling and empirical approaches that evolved over the ensuing decade.
    b. **Minimizing hydraulic short circuiting.** During the design, the District evaluated the benefits of complete backfilling of existing farm canals. Based on modeling results, the District utilized plugs in lieu of the more expensive complete backfilling, a decision subsequently reversed in future STAs after field observations indicated hydraulic short circuiting in plugged canals.

4.2 Construction

Construction of the ENR project was completed in the fall of 1993. During construction, dewatering flows were directed off site north to the Ocean Canal. Control of exotic plant species was included in construction specifications. Most of the site was disked, however, the contractor was unable to get conventional equipment in Cell 4 for disking, and the area was roller chopped (use of a heavy drum with knives on the surface; it compacts the soil at the same time as it chops any standing biomass). Despite staff objections, regulatory requirements mandated that over 810,000 plants (roughly 1000 plants per acre) be planted in Cell 3 including sawgrass, arrowhead, pickerelweed, spikerush, and maidencane (Chimney and Goforth, in press). Sawgrass was the most difficult to successfully plant; bare root transplant didn't work and ultimately the contractor had to use plants grown from seed and transplanted in sleeves. The remaining cells were allowed to vegetate through volunteer recruitment. Selective herbicide application was used in Cell 4 to promote SAV by excluding emergent vegetation, except for 25-ac filter, or "trap" patch required by permit to prevent algal biomass from leaving the cell.

Experience indicated that normally planting could be effective – but the STAs were too large to be cost effective; in addition, there were concerns that there may not be enough plant supply (Kosier personal comm.. 2004). Seeding may be potentially feasible if a method is developed for the large spatial scale; taking a cell off line in order to dry down and control of water levels may be a challenge also, as appropriate reflooding is critical for success of seeding.

Construction of the additional treatment cell and physical improvements making up STA-1W was completed in 1999, while the outflow pump station was completed in October 2000. Cell 5 was disked prior to inundation. There has been considerable debate regarding disking prior to inundation. In some emergent cells (e.g., Cells 2 and 3), healthy emergent vegetation was established after disking. However, Cell 5 demonstrated high initial P concentrations (800 ppb) and relatively poor performance after an initial period of good performance. In practice, disking involves turning the soil 12-18 inches deep, which creates air pockets in the soil. These air pockets may favor cattails over SAV as well as create loose conditions that may contribute to higher turbidity and release of soil phosphorus (Kosier personal comm. 2004).

4.3 Start-up

A summary of the management activities implemented during construction and start-up is provided in Table 4-1. For Cell 4, volunteer recruitment of SAV from existing farm canals took 1-2 years to establish; an effective but slow method.

Table 4-1. Summary of Construction and Start-up Phase Vegetation Management

Cell	Antecedent land use	Target vegetation type	Land preparation	Construction Dewatering	Start-up operational management
1	Agriculture (primarily sugar cane, with some vegetables and rice)	Emergent	Disked	Off-site	Inundate – 0-0.5 ft
2	Agriculture (primarily sugar cane, with some vegetables and rice)	Emergent	Disked	Off-site	Inundate – 0-0.5 ft
3	Agriculture (primarily sugar cane with some vegetables and rice)	Emergent	Disked and planted 800,000 plants	Off-site	Inundate – 0-0.5 ft
4	Agriculture (primarily sugar cane with some vegetables and rice)	Algal polishing cell (SAV)	Roller chopper (a.k.a. “Devil Catcher”)	Off-site	Inundate to 3 feet quickly
5A	Agriculture (primarily sugar cane with some vegetables and rice)	Emergent	Disked	Off-site	Inundate to 3 feet quickly; keep deep for 60-90 days then lowered to 0.5-1.0 ft
5B	Agriculture (primarily sugar cane with some vegetables and rice)	SAV	Disked	Off-site	Inundate to 3 feet quickly; keep deep for 60-90 days then lowered to 0.5-1.0 ft

Based on the exceptional performance of SAV in Cell 4, in January 1999 the District switched from emergent to SAV as target vegetation type in Cell 5B and made

necessary adjustments to start-up operations, i.e., deeper initial flooding depths. The target vegetation for Cell 5A remained as emergent. Beginning in March 1999, Cell 5 was flooded to ~3 ft. to promote SAV and inhibit spread of emergent plants. In July 1999, water depths were lowered to ~1.5 feet to help establish SAV. In Sept. 1999, District staff transplanted 35 cubic yards of SAV (naiad) harvested by mechanical means from Cell 3 and transported to Cell 5 by truck. Some of the material was placed along the perimeter levee, while some was deposited at the G-304 levee during periods of inflow. In October 1999, the depth was increase to ~2 feet to slow spread of emergent vegetation (concern was torpedo grass and alligator weed – by far the biggest concern was torpedo grass). In February 2000, staff added tomato stakes as artificial substrate to give the SAV fragments an anchor.

Several lessons were learned regarding torpedo grass from both the STA and Lake Okeechobee experience (LaRoche 1999):

- Once established, torpedo grass cannot be drowned out within an STA.
- Arsenal seems to be the most effective herbicide with a single application
- Rodeo can be effective and is cheaper per application, but may take up to four applications
- The most effective application appears to be when the area is dry or nearly dry, particularly after a fire
- It may take a period of several months after application to determine whether the application was effective
- After the herbicide has been applied and maximum results are evident, water levels should be raised to suppress regrowth

4.4 Normal operations

Though 2004, vegetation management consisted of routine aerial surveillance, and herbicide application for control of undesirable vegetation. In addition, periodic mechanical harvesting of SAV occurs in the “finger canals” located just upstream of the collection canal for G-251 to maintain conveyance capacity. A summary of herbicide applications for the last 4 water years is presented in Table 4-2 taken from the annual Everglades Consolidated Reports.

Table 4-2. Summary of Herbicide Application for STA-1W (gallons)

Water Year	Glyphosate (various)	Arsenal (imazipyr)	Reward (diquat dibromide)	2-4,D
2001	633	28.5	0	0
2002	633	28.5	0	0
2003	707	0	1050	730
2004	114	0	132.5	0

In addition, target water levels are maintained to sustain desirable vegetation. Target depths were recently lowered:

Table 4-3. Summary of Current Target Water Depths in STA-1W

Cell	Target Vegetation	Target Depth
1	Emergent	1.55
2	Emergent	1.50
3	Emergent	1.25
4	SAV	1.25
5	SAV	1.75

Through 2002 no large scale herbicide applications were utilized in Cell 5. However, by late 2002, it was clear that the large floating aquatic vegetation (FAV) was creating performance problems, so over 1000 acres were treated with herbicide, resulting in effective control. A lesson learned from this experience (along with similar occurrence in STA-5) is to stay ahead of the FAV growth by actively controlling its growth with herbicide.

To minimize the disruption of outflow pump G-310 caused by the discharge of floating SAV fragments, a vegetation control plan was developed for G-308 and G-309. This consisted of periodic gate openings to release any SAV material that may have lodged against the gate, thereby preventing a buildup of SAV mats at the structure that could move downstream and clog the trash racks at G-310.

Target operating depths were exceeded in Cells 2 and 4 during the retrofit of the test cells in Cells 1 and 3. As a result, the spatial coverage of cattails decreased dramatically. Floating tussocks of cattail and other plants popped free and scoured the bottom, severely diminishing the treatment performance of this flow-way. Physical removal by dragline was effective but limited to the location of the dragline, the reach of the boom and the direction of the wind. Removal by chopping with a “cookie cutter” and harvesting was expensive and not truly effective. In addition, the water depth in Cell 2 was lowered in 2004 in an attempt to allow the tussocks to re-root to no avail.

Concepts of disturbance management, e.g., burning and draw down, are currently being added to the vegetation management tool kit. A proposal by Rodgers (2004) identified several thousand acres for burning in the near future, however, no burns are proposed for STA-1W at this time (outside of the STA enhancements as discussed below). Draw down, and potential dry outs, may be investigated for P removal enhancements, vegetation health and soil consolidation benefits. Pant and Reddy (2001) report that draw downs of 30-days or less resulted in minimal phosphorus reflux from the sediment, while increased the humification and microbial immobilization of phosphorus from wetland detritus. It was interesting to note that the 1988 conceptual design of the research and development program for the ENR recommended routine harvesting and burning for “physically removing vegetation biomass and nutrient content,” (Davis 1988), neither of which were actually implemented. These activities were also identified as

alternative management strategies in the 1991 Land Management Plan for the ENR project (SFWMD 1991).

Presently, a formal vegetation management plan does not exist for STA-1W as exists for STA-1E; there are benefits to developing one.

A summary of existing vegetation in STA-1W is presented in Table 4-3.

Table 4-3. Existing vegetation in STA-1W.

	Cell	Size of cell (acres)	Existing Vegetation Type
STA-1W	Cell 1	1,490	Emergent
	Cell 2	942	Open water and sparse emergent with floating tussocks
	Cell 3	1,026	Emergent
	Cell 4	358	SAV
	Cell 5A	562	Mixture of emergents and SAV
	Cell 5B	2,293	SAV

4.5 STA Enhancements

A schematic of the enhanced STA-1W is presented in Figure 4-3.

The major vegetation management activities planned for the enhancement of STA-1W include

- removal of tussocks from Cell 2 (and potentially Cell 1)
- re-establishment of the emergent community in the new Cell 2A,
- establishment of SAV in Cell 2B
- conversion of emergent vegetation to SAV in the new Cell 1B and Cell 3

It is also desired that emergent vegetation be established in Cell 5A as soon as practical.

Many lessons learned from experiences at the STAs and other wetland systems will be incorporated into these activities, including:

- the use of a combination of herbicide, mowing and fire as part of the vegetation establishment and conversion procedures
- the use of emergent vegetation strips within an SAV treatment cell
- leaving pockets of SAV within emergent cells, and if manageable, small pockets of FAV, although the size threshold (e.g., 5 acres of 100 acres) is not known

- harvesting SAV from nearby donor sites (where applicable) and transplanting to areas targeted for SAV to accelerate the conversion from emergent to SAV.

The September 2004 hurricanes severely impacted the SAV community in Cell 5B. District staff prepared an STA-1W Recovery Plan designed to provide a methodology and time scale to restore and enhance the nutrient removal performance of the STA-1W (SFWMD 2004). The initial operating strategy for Cell 5B was to lower depths to 1.25 – 1.5 feet to facilitate regrowth of the SAV. The effectiveness of this strategy should be monitored, and refinements (e.g., lower depths) should be made as needed.

Figure 4-3. STA-1W Enhancements (not to scale).

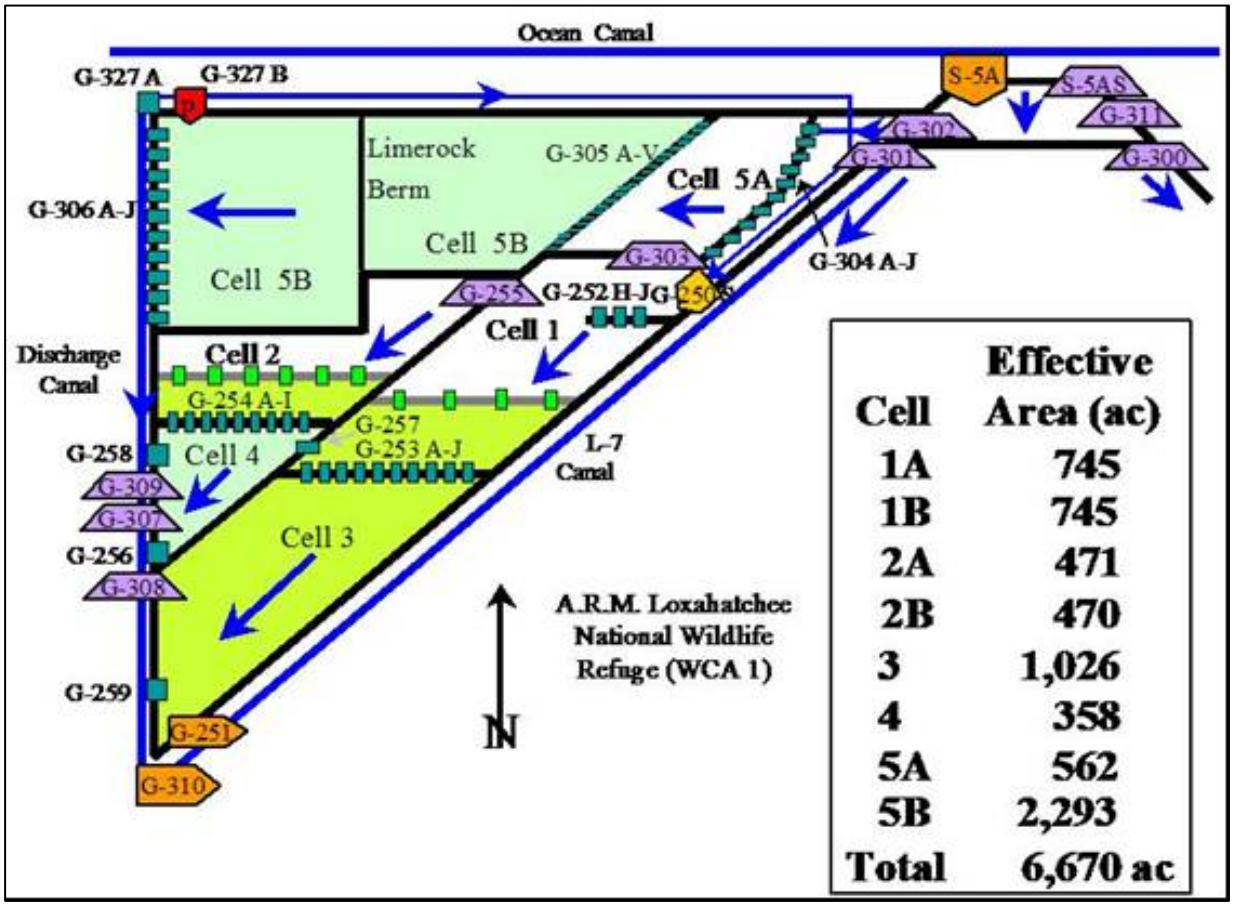

5 STA-2

A schematic of STA-2 is presented in Figure 5-1, and a recent aerial photo of the STA is shown in Figure 5-2.

Figure 5-1. Schematic of STA-2 (not to scale).

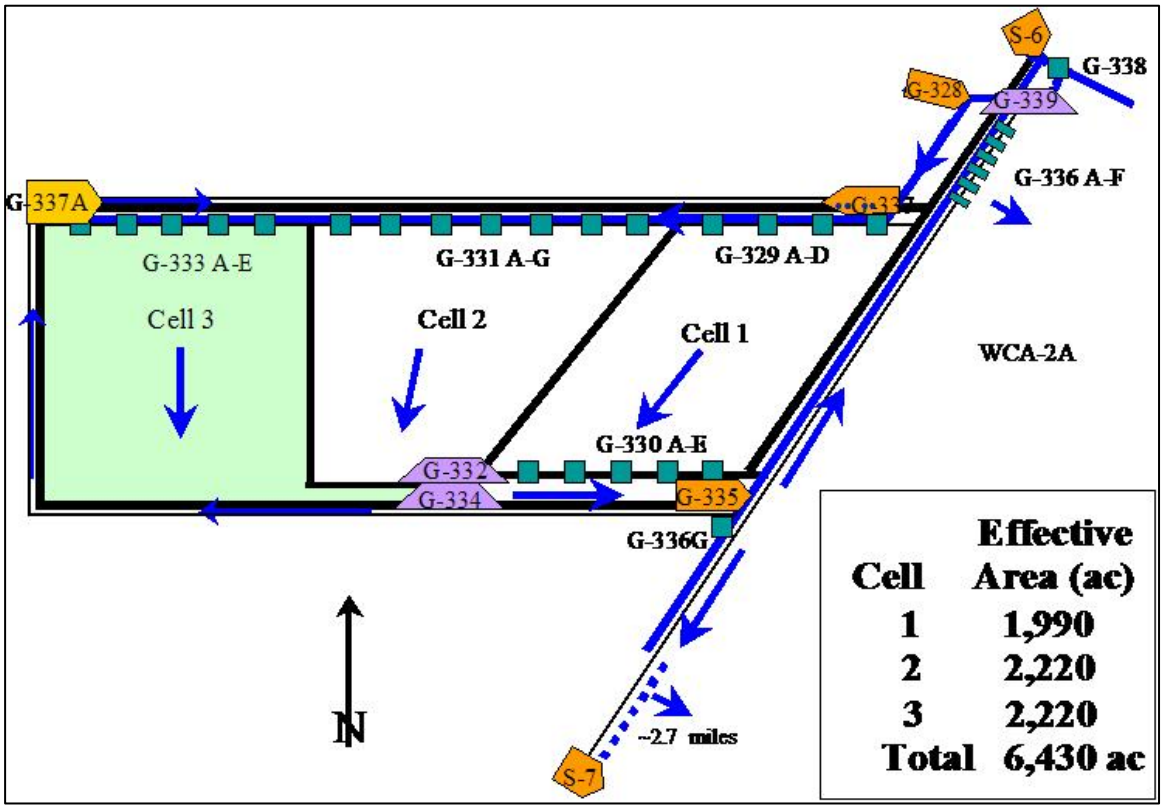

5.1 Design Considerations

All three treatment cells were designed as emergent vegetation treatment cells. Cell 1, most of Cell 2 and about 500 acres of Cell 3 were previously the Brown's Farm Wildlife Management Area and contained about 4,500 acres of degraded Everglades habitat. The hydraulic analyses incorporated variable resistance to flow attributable to the vegetation, with lower resistance at higher depths, as shown in Figure 5-3 (Goforth 2000).

5.2 Construction

Cells 1 and 2 were used to retain dewatering flows on site. Disking was employed in the former agricultural areas of Cells 2 and 3, although to a lesser extent than in STA-1W (i.e., not triple-disked). The contractor was directed to fill in existing farm canals that ran parallel to the flow path (i.e., north-south orientation), and leave open those canals that were perpendicular to the flow (i.e., east-west orientation).

Figure 5-2. Aerial photo of STA-2 (SFWMD 2004).

Figure 5-3. Resistance to Flow as a Function of Depth

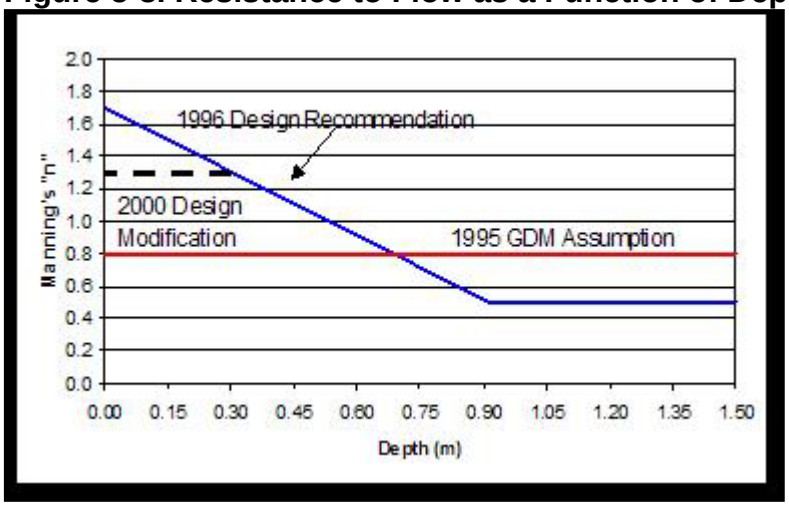

5.3 Start-up

A summary of the management activities implemented during construction and start-up is provided in Table 5-1. In June 1999, the District began inundating cells 2 and 3. By

that time, a decision was reached to encourage the establishment of SAV in Cell 3, so higher water levels were initially maintained in that cell (2-3 feet) than in the other cells (0.5-1 ft).

Table 5-1. Summary of Construction and Start-up Vegetation Management

Cell	Antecedent Land Use	Target Vegetation Type	Land Preparation	Construction Dewatering	Start-up operational management
1	Remnant Everglades (emergent and some trees)	Emergent	None	On-site (Cell 1 and Cell 2)	0.5 – 1.0 ft during dewatering
2	Remnant Everglades (emergent) with ~500 acres of sod farm	Emergent and SAV	Disked old sod farm	On-site (Cell 1 and Cell 2)	Intermittent 0.5 – 1.0 ft during dewatering
3	Sod farm and cane, except for 500 aces of remnant Everglades	SAV	Disked some ag fields; left stubble in others	On-site (Cell 1 and Cell 2)	Inundate to 2-3 feet quickly; after 60 days, lowered to 0-0.5 ft

In addition, Brazilian pepper was sprayed in the 500-acre portion of Cell 3 that was part of the Brown's Farm Wildlife Management Area.

5.4 Normal operations

Though 2004, vegetation management consisted of routine aerial surveillance, and herbicide application for control of undesirable vegetation. A summary of herbicide applications for the last 4 water years is presented in Table 5-2, taken from the annual Everglades Consolidated Reports. Although cattail was controlled (i.e., periodic aerial and airboat spraying) in Cell 3 up through 2004, the current strategy is to leave the cattail to act as substrate for periphyton, serve as a wind break, and add vegetative diversity to the cell.

Table 5-2. Summary of Herbicide Application for STA-2 (gallons).

Water Year	Glyphosate (various)	Garlon 3A (trichlopyr)	Arsenal (imazipyr)	Reward (diquat dibromide)	Endothall
2001	750	1000	0	0	0
2002	80		40	0	0
2003	235	0	0	0	0
2004	163	0	0	95.75	393 gallons liquid; 2,571 pounds granular

In addition, target water levels are maintained to sustain desirable vegetation. Target depths were recently lowered to 1.25 ft in all cells.

Concepts of disturbance management, e.g., burning and draw down, are currently being added to the vegetation management tool kit. A proposal by Rodgers (2004) identifies several thousand acres for burning in the near future, including 1,560 acres in Cell 2. Draw down, and potential dry outs, may be investigated for phosphorus removal enhancements, vegetation health and soil consolidation benefits.

Presently, a formal vegetation management plan does not exist for STA-2 as exists for STA-1E; there may be a benefit to developing one.

A summary of existing vegetation in STA-2 is presented in Figure 5-4 and Table 5-3, and an aerial photo of Cell 3 is presented in Figure 5-5.

Figure 5-4. STA-2 Vegetation Map (SFWMD 2004).

Classification	Acreage	Percent of Total
PC	2575.48	38.44%
PC/PE	48.51	0.72%
PC/PE-9	0.24	0.00%
PC/PGc	696.78	10.40%
PC/PGx	21.83	0.33%
PC/W	23.40	0.35%
PE	0.19	0.00%
PE/W	143.61	2.14%
PEb	44.21	0.66%
PEf	12.68	0.19%
PEo	3.32	0.05%
PG/PE	149.06	2.23%
PG/W	330.76	4.94%
PGc	327.54	4.89%
PGx	6.69	0.10%
SA	5.34	0.08%
W	163.45	2.44%
W-14	1371.81	20.48%
W-14/-9	8.96	0.13%
W-15	760.39	11.35%
W-9	4.96	0.07%
Total Area	6699.22	

Table 5-3. Existing vegetation in STA-2 (SFWMD 2004).

Habitat	Acres	% Cover
Open water	168.4	2.5
Open water with SAV	2,141.2	32.0
Emergent with open water (50/50)	497.8	7.4
Emergent	3,873.9	57.8
Floating	12.7	0.2
Other	5.3	0.1
Total	6,699.2	100.0

During 2004, the effectiveness of herbicide applications for control of hydrilla was investigated in Cell 3 (Fogarty-Kellis et al. 2004). 75.5 acres were treated with liquid and granular herbicide Aquathol K in two separate applications. Unfortunately, neither application was effective in controlling hydrilla.

Figure 5-5. Photo of STA-2 Cell 3 looking north.

5.5 STA Enhancements

A schematic of the enhanced STA-2 is presented in Figure 5-6, which shows the additional treatment cell 4.

Figure 5-6. Schematic of STA-2 Enhancement (not to scale).

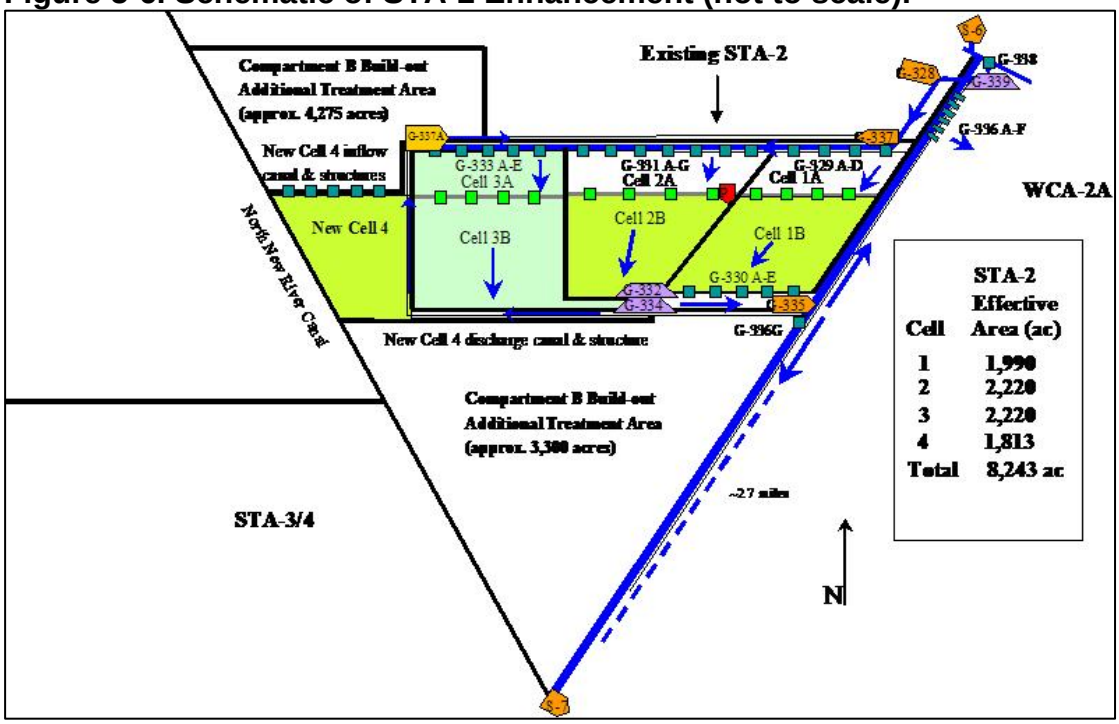

The major vegetation management activity planned for the enhancement of STA-2 is conversion of emergent vegetation to SAV in the new Cells 1B and 2B (after the new Cell 4 is in flow-through operation).

Many lessons learned from experiences at the STAs and other wetland systems will be incorporated into these activities, including:

- the use of a combination of herbicide, mowing and fire as part of the vegetation conversion procedure
- the use of emergent vegetation strips within an SAV treatment cell
- leaving pockets of SAV within emergent cells, and if manageable, small pockets of FAV, although the size threshold (e.g., 5 acres of 100 acres) is not known
- harvesting SAV from nearby donor sites (where applicable) and transplanting to areas targeted for SAV to accelerate the conversion from emergent to SAV.

STA-2 has been performing exceptionally well, averaging 16 ppb over the life of the project, with from 10-25% of the cell discharge grab samples at or below 10 ppb. This performance is similar to the expected performance after the enhancements, so the District is proceeding cautiously in making the large-scale conversion to SAV in cells 1 and 2, particularly without experience in large-scale conversion from emergent to SAV communities.

6 STA-3/4

A schematic of STA-3/4 is presented in Figure 6-1, and a recent aerial photo of the STA is shown in Figure 6-2.

Figure 6-1. Schematic of STA-3/4 (not to scale).

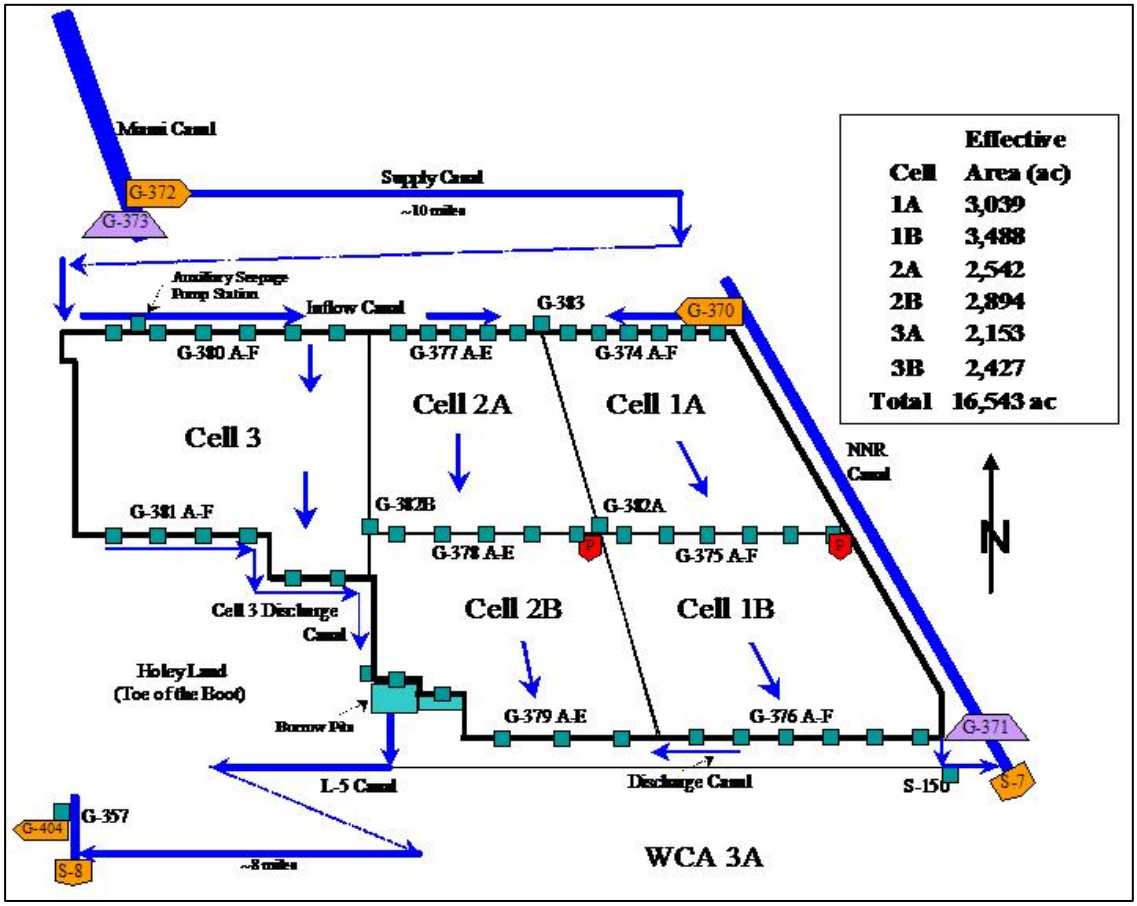

6.1 Design Considerations

STA-3/4 was designed for emergent vegetation in all the treatment cells.

The design of STA-3/4 benefited from many lessons learned from the previous STAs. With respect to vegetation management, these included

- Phased termination of existing agriculture activities, with requirement that farmer control exotic pant species
- Completely filling existing farm canals that run parallel to flow
- Leaving open existing farm canals that run perpendicular to flow
- Use of variable vegetative resistance to flow
- Specifying the construction dewatering flows be retained on site

In addition, virtually all of Cell 1B was allowed to vegetate with wetland species as part of an agreement between the District and the Florida Fish and Wildlife Conservation Commission (FWC) that allowed the FWC to manage the area as the Terrytown Wildlife Management Area.

Figure 6-2. Aerial photo of STA-3/4 (SFWMD 2004).

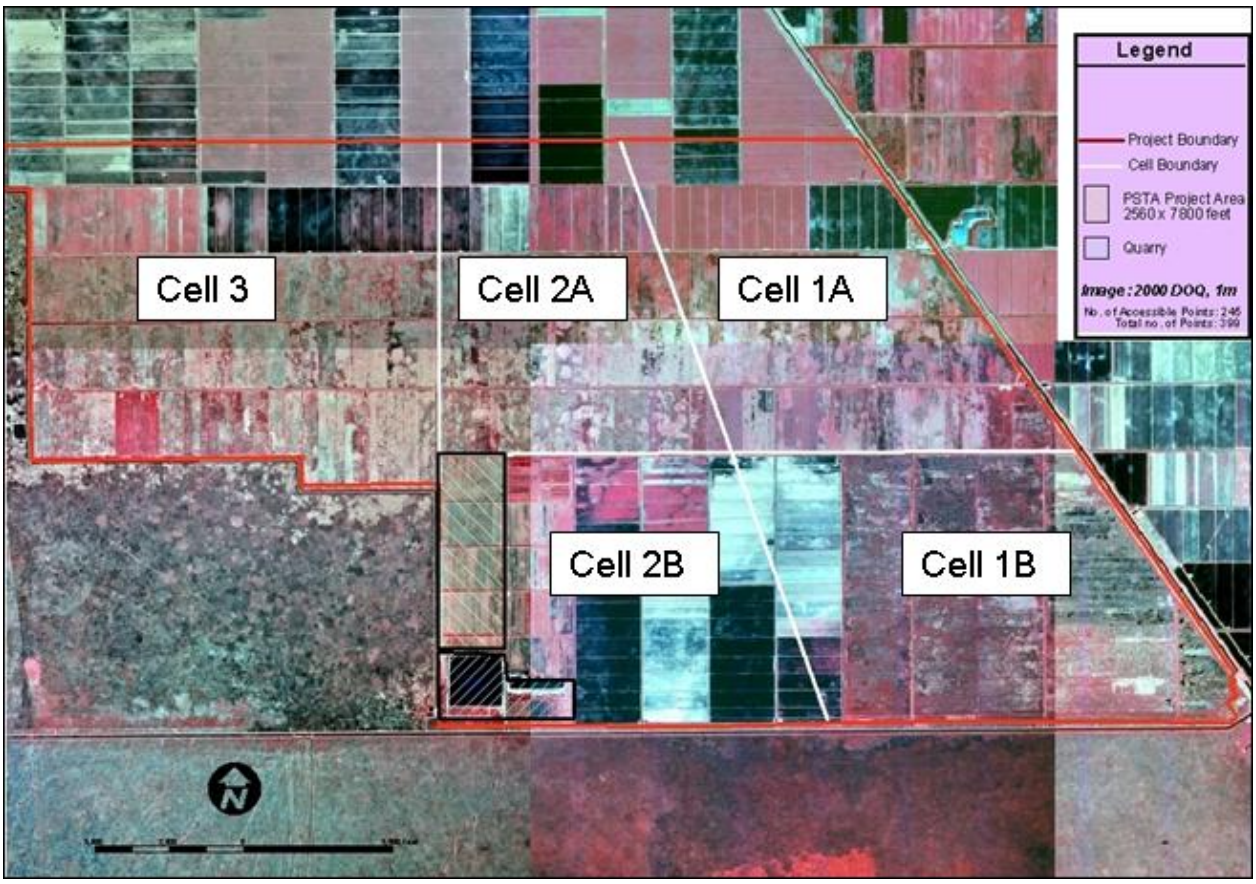

6.2 Construction

Dewatering flows were retained on site during construction. As a result of this and the above activities, the vegetation within STA-3/4 was very robust at the time of construction completion, as evidenced by Figures 6-3 and 6-4 below.

In addition to the activities described above, there was no herbicide application in any treatment cell during construction except Cell 2B as part of the vegetation conversion enhancement activity described below.

Figure 6-3. Aerial view of Cell 1A looking southwest with G-370 in the foreground.

Figure 6-4. Aerial view of Cell 2A looking south from the north levee.

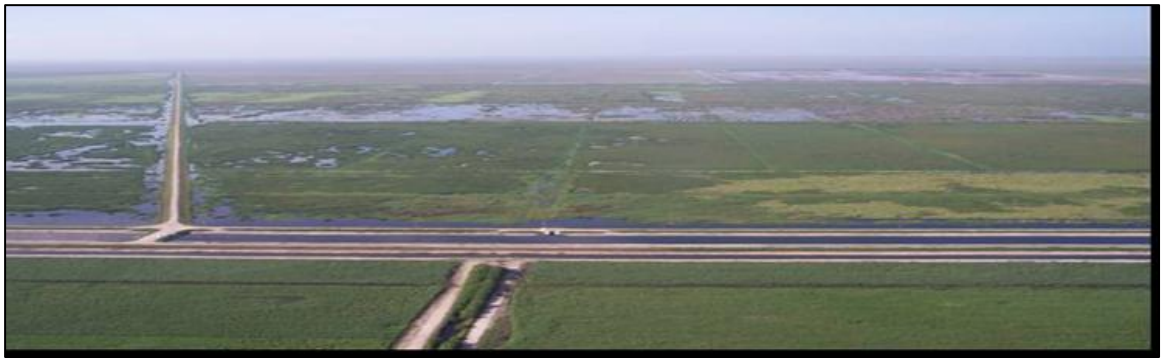

6.3 Start-up

A summary of the management activities implemented during construction and start-up is provided in Table 6-1. Torpedo grass was prevalent in the treatment cells. In herbicide-treated areas that were previously sugar cane where there was not a lot of litter (e.g., through burning), SAV has been observed within the cane stubble. However, in Cell 3, there are similar “dead zones” in the remnant cane areas as was observed in STA-1W Cell 1.

Approximately 1900 acres of Cell 2B was slated for conversion to an SAV community. This activity began in the fall of 2003 while the balance of the treatment area was in the

start-up phase. A combination of herbicide and fire was used to prepare the area for SAV transplanting. Strips of existing emergent vegetation (cattail, paragrass and remnant sugar cane) approximately 100-ft wide were left approximately 500-1000 feet on center (see Figure 6-5). In herbicide-treated areas that were previously sugar cane where there was not a lot of litter (e.g., through burning), SAV has been observed within the cane stubble. In herbicide-treated areas where there was a lot of litter (i.e., with no burning), periphyton and not SAV, has been observed within the cane stubble and litter.

Table 6-1. Summary of Construction and Start-up Vegetation Management

Cell	Antecedent Land Use	Target Vegetation Type	Land Preparation	Construction Dewatering	Start-up operational management
1A	Sugar cane	Emergent	Harvested cane	On-site	6 inches to 1 foot
1B	Sugar cane	Emergent	Harvested cane	On-site	6 inches to 1 foot
2A	Sugar cane	Emergent	Harvested cane	Onsite	6 inches to 1 foot
2B	Sod farm, tree nursery, sugar cane	SAV	Combination of herbicide, burn, and no preparation	On-site	Transplanted 61,000 pounds of SAV from Cell 3 of STA-2
3	Sugar cane	Emergent	Harvested cane	On-site	6 inches to 1 foot

Figure 6-5. Aerial photo of Cell 2B showing the strips of remaining emergent vegetation.

During August of 2004, approximately 61,000 pounds of SAV was harvested from STA-2 Cell 3 and transported via helicopter and cargo net to 50 pre-specified locations in Cell 2B. After approximately 30 days flow through the cell began. The following summary was provided by Lou Toth:

Field observations indicate that submerged aquatic vegetation (SAV), which was inoculated via helicopter at 50 sites in Cell 2B in August, had begun to become rooted in the soil by November. All three inoculated species, i.e., Chara, Najas and Potamogeton illinoensis, appeared to suffer minimal mortality during harvesting, aerial transport and the post-inoculation establishment period, which included two hurricane events in September, but did not become rooted until water levels could be lowered to < 50 cm in late October - November. Field observations also indicate that submerged aquatic vegetation has begun to naturally colonize unvegetated locations in Cell 2B, including the treated torpedograss plots. Field data collection of SAV establishment in Cell 2B will be initiated during the next quarter.

6.4 Normal operations

A draft site management plan was prepared for STA-3/4 (SFWMD 2003), however, this is not as thorough as the vegetation management plan developed for STA-1E. Vegetation management consisted of routine aerial surveillance, and herbicide application for control of undesirable vegetation. A summary of herbicide applications for the last 4 water years is presented in Table 6-2.

In addition, target water levels are maintained to sustain desirable vegetation. Target depths:

- Emergent vegetation: 1.25 ft
- SAV: 1.5 ft +/-

Table 6-2. Summary of Herbicide Application for STA-3/4 (gallons)

Water Year	Glyphosate (various)
2001	0
2002	0
2003	0
2004	1,412

A summary of existing vegetation in STA-3/4 is presented in Table 6-3.

Torpedograss appears to be expanding in cells 1A and 2A, and remains an area of concern to District staff. In areas where the dense torpedograss is present within the remaining sugar cane stalks, minimal periphyton and SAV is observed, in contrast to those areas where the litter was removed through herbicide and burning. A study is underway to compare herbicide effectiveness on torpedograss in STA-3/4.

Table 6-3. Existing vegetation in STA-3/4.

	Cell	Size of cell (acres)	Existing Vegetation Type
STA-3/4	Cell 1A	3,039	Emergent
	Cell 1B	3,488	Emergent
	Cell 2A	2,542	Emergent
	Cell 2B	2,894	SAV with emergent strips; 407-acre PSTA demo project
	Cell 3	4,580	Emergent

The following summary was provided by Lou Toth (2005):

> Post-flooding sampling of all 18 torpedograss plots (7.4 ac each) in Cell 2B was completed in October 2004. Results indicate both herbicide treatments (imazapyr and tank mix of imazapyr and glyphosate) and fire, alone and in combination, were effective in reducing torpedograss cover when these treatments were applied to dense stands of torpedograss in dry conditions (e.g., during STA startup and conversion). Complete elimination of torpedograss was achieved by burning prior to application of either imazapyr or imazapyr and glyphosate. The variable effects of fire after application of imazapyr and glyphosate, and fire alone, suggests burning may be most useful as a management tool for eliminating torpedograss in shallow organic soils. Extant soils in STA 3/4 are remnant Everglades muck that could have been variably depleted by different land uses subsequent to drainage. However, because soil depth measurements were taken only after plots were burned, the observed variability in soil depths and associated effects on torpedograss also could have been due to burning of muck soils and direct effects of fire on belowground torpedograss tissues. The potential effects of muck fires on soils and subsequent performance should be evaluated if fire is to be used in STA startup and conversion.

Concepts of disturbance management, e.g., burning and draw down, are currently being added to the vegetation management tool kit. A proposal by Rodgers (2004) identifies several thousand acres for burning in the near future, including 2,437 acres in Cell 3 associated with the vegetation conversion. Draw down, and potential dry outs, may be investigated for phosphorus removal enhancements, vegetation health and soil consolidation benefits.

6.5 STA Enhancements

A schematic of the enhanced STA-3/4 is presented in Figure 6-5. The major vegetation management activity planned for the enhancement of STA-3/4 is conversion of emergent vegetation to SAV in Cells 1B and the new 3B. Many lessons learned from

experiences at the STAs and other wetland systems will be incorporated into these activities, including:

- the use of a combination of herbicide, mowing and fire as part of the vegetation conversion procedure
- the use of emergent vegetation strips within an SAV treatment cell
- leaving pockets of SAV within emergent cells, and if manageable, small pockets of FAV, although the size threshold (e.g., 5 acres of 100 acres) is not known
- harvesting SAV from nearby donor sites (where applicable) and transplanting to areas targeted for SAV to accelerate the conversion from emergent to SAV.

STA-3/4 has been performing exceptionally well, averaging less than 15 ppb over the short life of the project, with many of the cell discharge grab samples at or below 10 ppb. This performance is similar to the expected performance after the enhancements, so the District is proceeding cautiously in making the large-scale conversion to SAV. However, given the dry down conditions in Cell 3 as part of the levee construction activity, the District is taking this opportunity to make the conversion to SAV in Cell 3B.

Figure 6-5. Schematic of STA-3/4 Enhancement (not to scale).

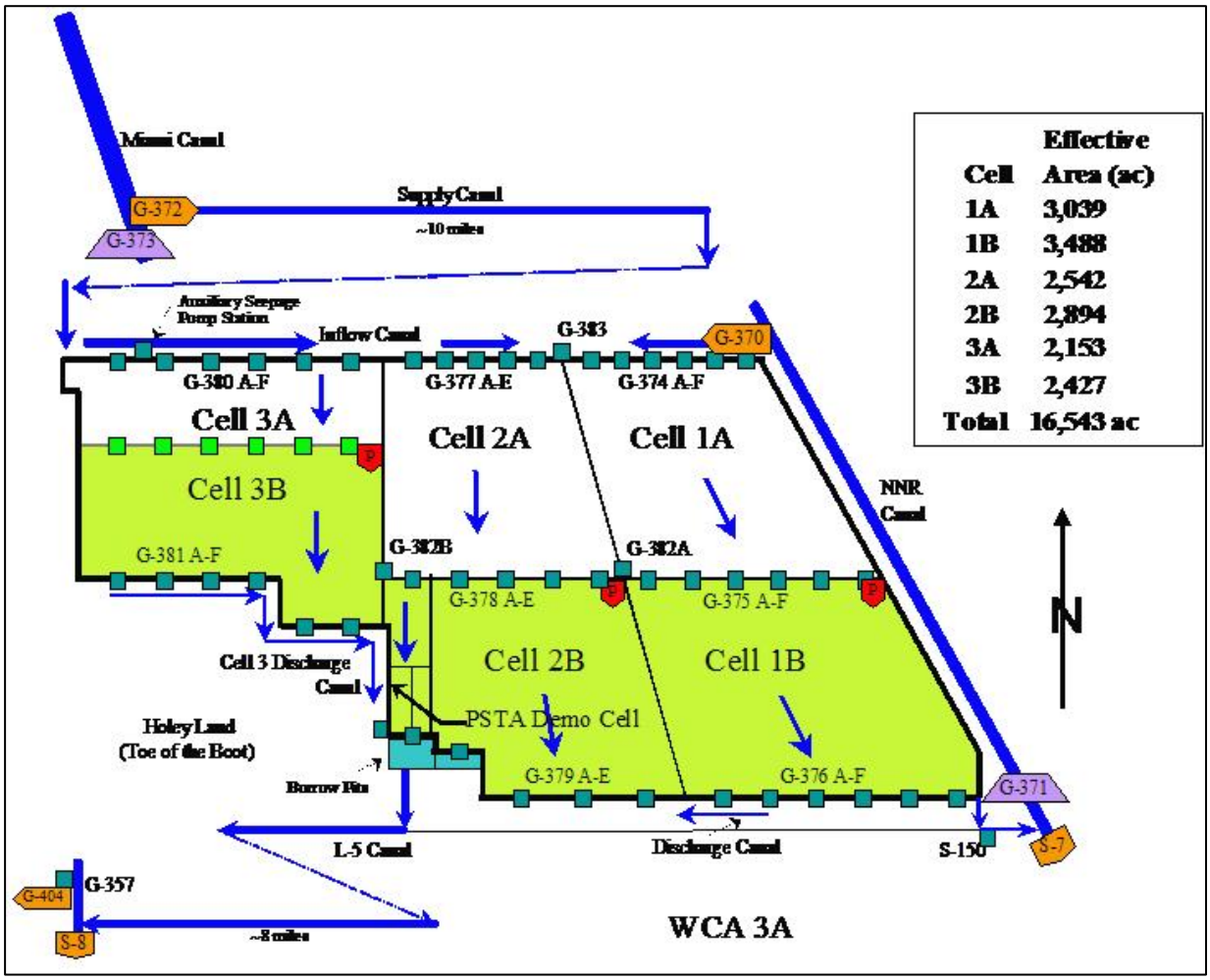

7 STA-5

A schematic of STA-5 is presented in Figure 7-1, and recent aerial photos of the STA are shown in Figures 7-2 and 7-3.

Figure 7-1. Schematic of STA-5 (not to scale).

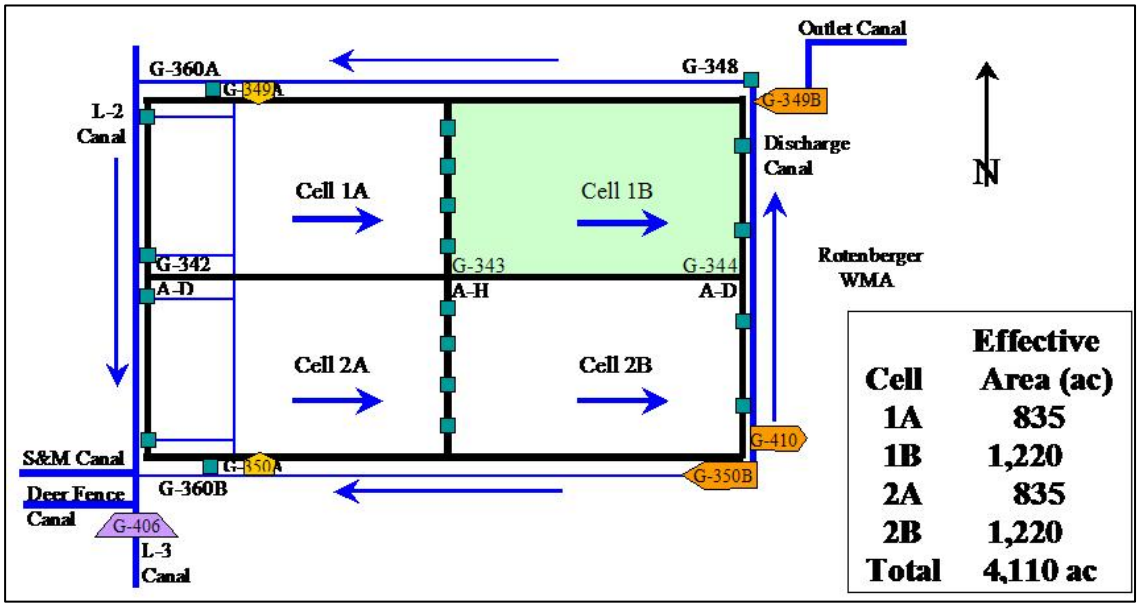

Figure 7-2. Aerial photo of STA-5 (SFWMD 2004).

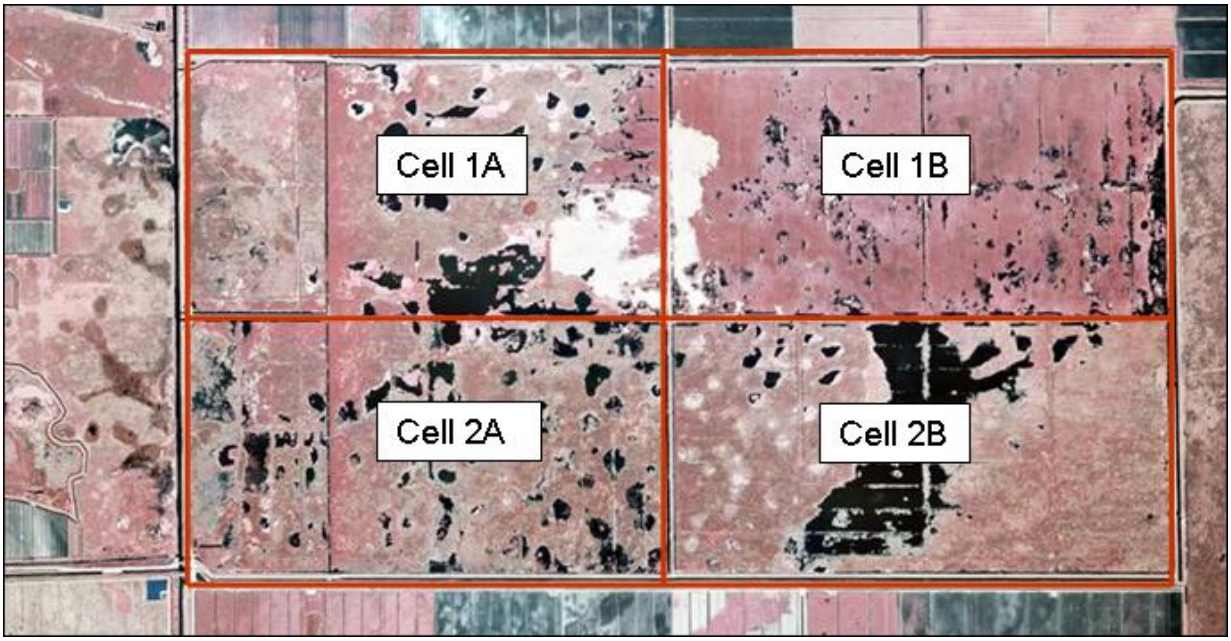

Figure 7-3. Aerial photo of STA-5 looking northwest from Cell 2B.

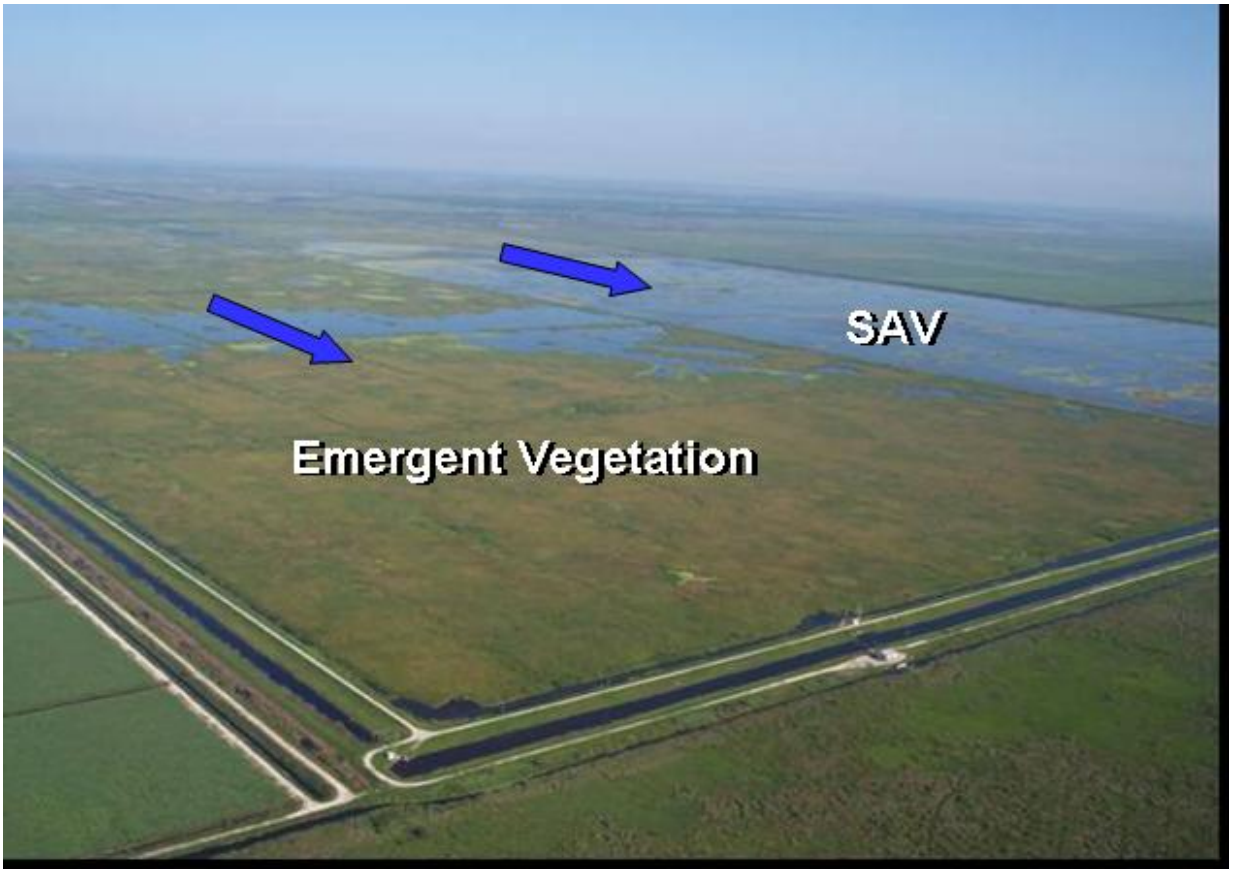

7.1 Design Considerations

STA-5 was designed with the assumption that all treatment cells would be emergent vegetation.

7.2 Construction

During Construction, dewatering flows were directed off site into the Manley Ditch. All the cells were disked.

7.3 Start-up

A summary of the management activities implemented during construction and start-up is provided in Table 7-1. The area was initially inundated just prior to construction completion in December 1998. After the initial inundation, the ensuing dry season resulted in dry conditions after that time. By the wet season of 1999, a decision was reached to encourage the establishment of SAV in Cell 1B, so higher water levels were initially maintained in that cell (2-3 feet) than in the other cells (0.5-1 ft). To accelerate SAV grow-in, the District began introducing small quantities (ice chests) of SAV to Cell 1B in December 1999.

Table 7-1. Summary of Construction and Start-up Vegetation Management

Cell	Antecedent Land Use	Target Vegetation Type	Land Preparation	Construction Dewatering	Start-up operational management
1A	Sugar cane	Emergent	Disked	Off-site (to Manley Ditch)	Inundate 0-2'
1B	Sugar cane	SAV	Disked	Off-site	Inundate to 2-3 feet quickly
2A	Sugar cane	Emergent	Disked	Off-site	Inundate 0-2'
2B	Sugar cane	Emergent	Disked	Off-site	Inundate 0-2'

7.4 Normal operations

Though 2004, vegetation management consisted of routine aerial surveillance, and herbicide application for control of undesirable vegetation. A summary of herbicide applications for the last 4 water years is presented in Table 7-2.

Table 7-2. Summary of Herbicide Application for STA-5 (gallons)

Water Year	Glyphosate (various)	Arsenal (imazipyr)	2-4,D	Garlon 3A (trichlopyr)	Reward (diquat dibromide)
2001	365	0	0	0	0
2002	231.2	0	491	56.1	50
2003	291	6	965	10	1635
2004	168	0	0	0	287.5

By the wet season of 2002, it was recognized that more intensive large-scale herbicide control, and physical removal in some area, of the FAV in Cell 1B was a necessity. Mats of treated (i.e., dead) SAV were blocking water control structures (see Figure 7-4), and their decomposition may have been responsible for associated poor phosphorus removal performance. Extensive vegetation management activities took place in Cell 1B through 2003, with very effective results (see Figure 7-5). The current strategy is to control the spread of FAV to avoid a similar situation.

In addition, target water levels are maintained to sustain desirable vegetation. Target depths were recently lowered:

- Emergent vegetation: 1.25 ft
- SAV: 1.5 ft +/-

Concepts of disturbance management, e.g., burning and draw down, are currently being added to the vegetation management tool kit. A proposal by Rodgers (2004) identifies several thousand acres for burning in the near future, including 835 acres in Cell 2A. Draw down, and potential dry outs, may be investigated for P removal enhancements,

vegetation health and soil consolidation benefits. Presently, a formal vegetation management plan does not exist for STA-5 as exists for STA-1E and STA-3/4; there may be a benefit to developing one.

Figure 7-4. Example of FAV blocking a water control structure in STA-5.

Figure 7-5. Photo showing the effectiveness of herbicide treatment of FAV in Cell 1B.

A summary of existing vegetation in STA-5 is presented in Figure 7-6 and Table 7-3.

Figure 7-6. Vegetation map of STA-5 (SFWMD 2004).

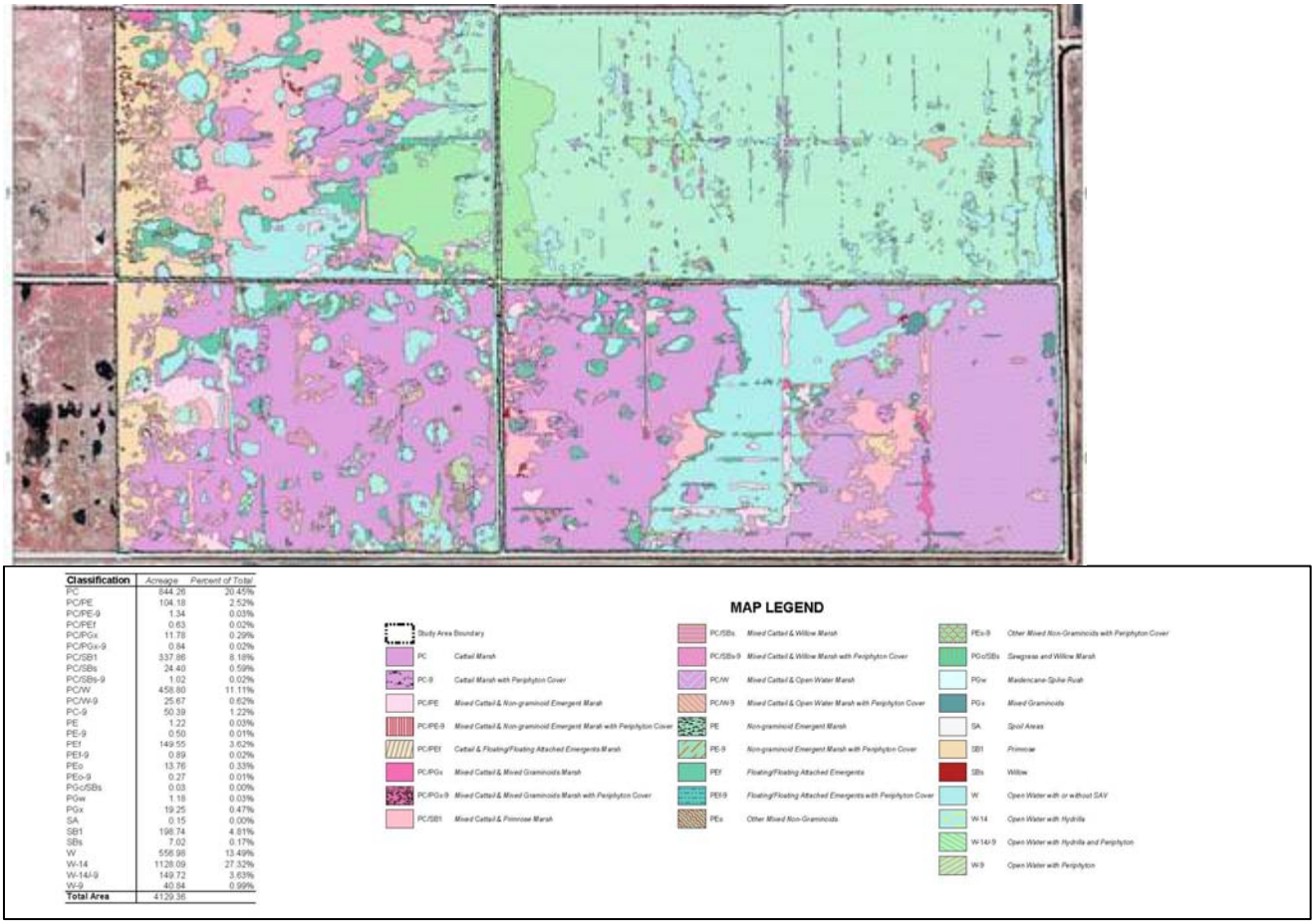

Classification	Acreage	Percent of Total
PC	844.26	20.45%
PC/PE	104.18	2.52%
PC/PE-9	1.34	0.03%
PC/PEf	0.63	0.02%
PC/PGx	11.78	0.29%
PC/PGx-9	0.84	0.02%
PC/SB1	337.66	8.18%
PC/SBs	24.40	0.59%
PC/SBs-9	1.02	0.02%
PC/W	458.80	11.11%
PC/W-9	25.67	0.62%
PC-9	50.39	1.22%
PE	1.22	0.03%
PE-9	0.50	0.01%
PEf	149.55	3.62%
PEf-9	0.89	0.02%
PEo	13.76	0.33%
PEo-9	0.27	0.01%
PGc/SBs	0.03	0.00%
PGw	1.18	0.03%
PGx	19.25	0.47%
SA	0.15	0.00%
SB1	198.74	4.81%
SBs	7.02	0.17%
W	556.98	13.49%
W-14	1128.09	27.32%
W-14/-9	149.72	3.63%
W-9	40.94	0.99%
Total Area	4129.36	

Table 7-3. Summary of vegetation in STA-5 (SWMD 2004).

Habitat	Acres	% Cover
Open water	597.8	14.5
Open water with SAV	1277.8	30.9
Emergent with open water (50/50)	484.5	11.7
Emergent	1412.9	34.2
Floating	150.4	3.5
Shrub	205.8	5.0
Other	0.2	0.0
Total	4129.4	100.0

Rodgers (2005) reports another potential lesson learned based on a recent reconnaissance of the primrose willow in STA 5. He reported “rapid accumulation of leaf litter which has already resulted in flow obstruction. It also forms a dense closed canopy

during the wet months which may reduce performance. The recommendation would be to limit expansion of this species in emergent cells to scattered individuals."

7.5 STA Enhancements

A schematic of the enhanced STA-5 is presented in Figure 7-7. The major vegetation management activity planned for the enhancement of STA-5 is conversion of emergent vegetation to SAV in Cell 2B. Figure 7-8 shows the additional treatment flow-ways between STA-5 and STA-6, with emergent vegetation in the upstream cell followed by SAV.

Many lessons learned from experiences at the STAs and other wetland systems will be incorporated into these activities, including:

- the use of a combination of herbicide, mowing and fire as part of the vegetation conversion procedure
- the use of emergent vegetation strips within an SAV treatment cell
- leaving pockets of SAV within emergent cells, and if manageable, small pockets of FAV, although the size threshold (e.g., 5 acres of 100 acres) is not known
- harvesting SAV from nearby donor sites (where applicable) and transplanting to areas targeted for SAV to accelerate the conversion from emergent to SAV.

Figure 7-7. Schematic of STA-5 enhancements (not to scale).

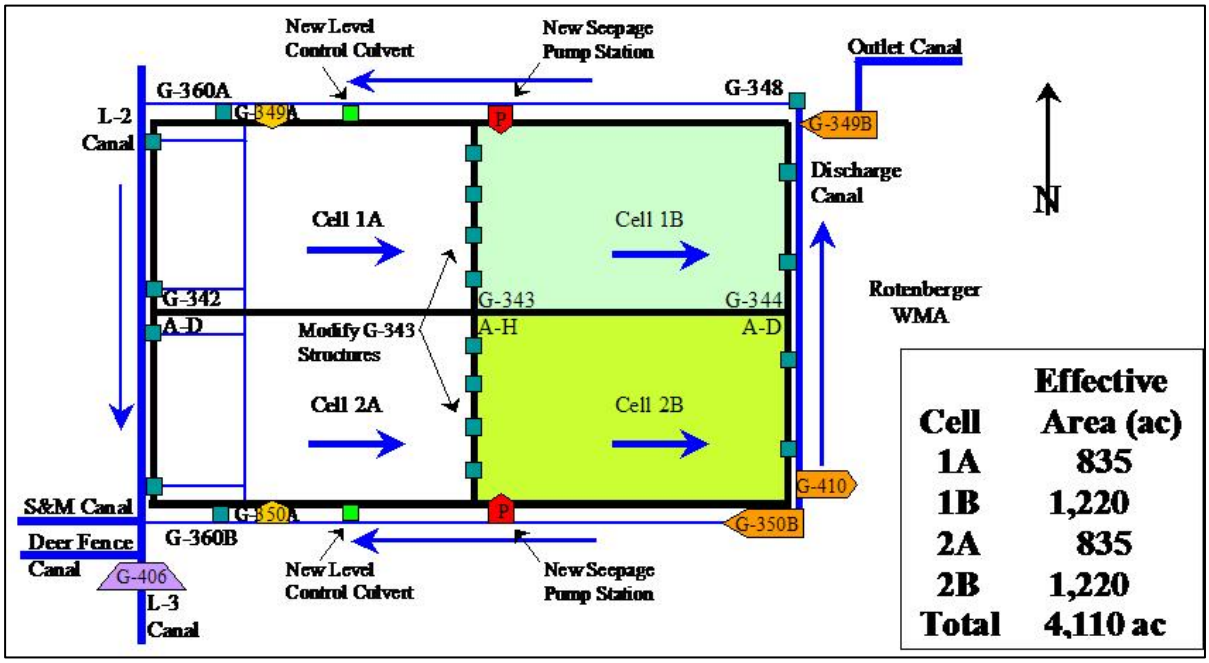

Figure 7-8. Schematic of full build-out of treatment areas STA-5 and STA-6.

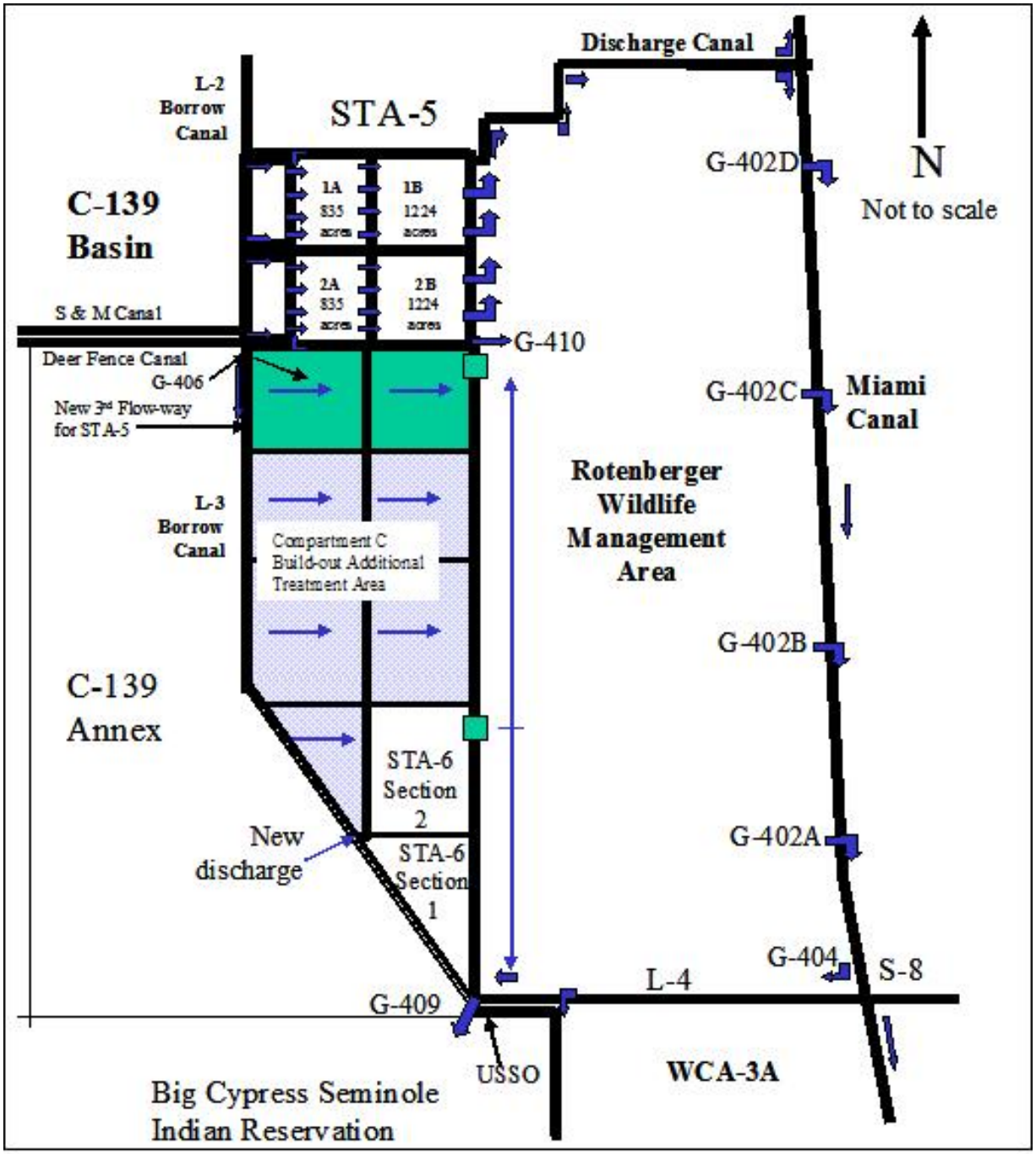

8 STA-6

A schematic of STA-6 is presented in Figure 8-1, and recent aerial photos of the STA are shown in Figures 8-2 and 8-3.

Figure 8-1. Schematic of STA-6 (not to scale).

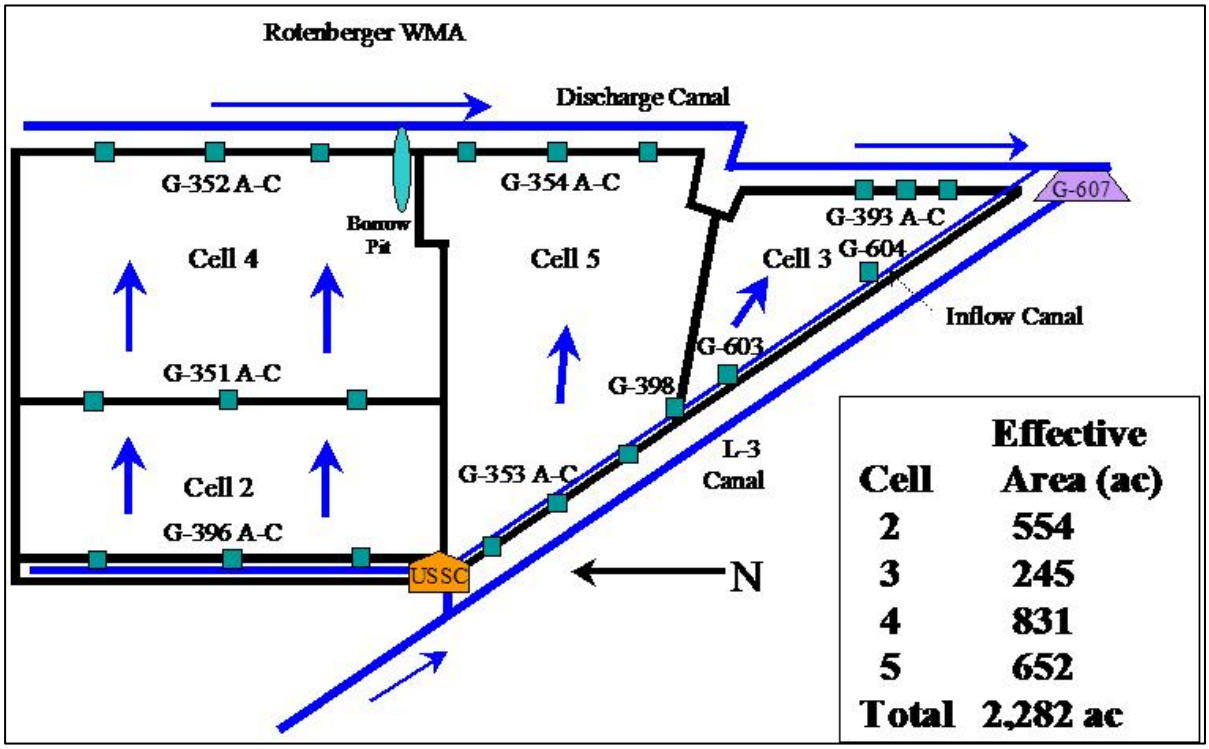

8.1 Design Considerations

STA-6 Section 1 was formerly a fully vegetated stormwater detention area. As such, there were no necessary site preparation activities (disking, etc.).

8.2 Construction

During the relatively short construction period of 7 months, the dewatering flows were directed within the vegetated areas on-site.

8.3 Start-up

A summary of the management activities implemented during construction and start-up is provided in Table 8-1. The area was inundated immediately upon construction completion in October 1997. Flow-through operations began in December 1997.

Figure 8-2. Aerial photo of STA-6 (SFWMD 2004).

Figure 8-3. Aerial photo of STA-6 looking north from outlet; inset is periphyton in Cell 5.

Table 8-1. Summary of construction and start-up vegetation management.

Cell	Antecedent Land Use	Target Vegetation Type	Land Preparation	Construction Dewatering	Start-up operational management
3	Existing emergent wetland	Emergent	None	On-site	Normal operating regime
5	Existing emergent wetland	Emergent	None	On-site	Normal operating regime

8.4 Normal operations

Though 2004, vegetation management consisted of routine aerial surveillance, and herbicide application for control of undesirable vegetation. A summary of herbicide applications for the last 4 water years is presented in Table 8-2.

Table 8-2. Summary of Herbicide Application for STA-6 (gallons)

Water Year	Glyphosate (various)	Garlon 3A (trichlopyr)	Arsenal (imazipyr)
2001	0	14.26	0
2002	43.17	26.5	4.31
2003	10	10	3
2004	0	0	0

Normal operations of STA-6 are facilitated by the fixed crest weirs on the outlet structures. This allows for retention of water below depths of about 1.4 ft. The wetland dries out almost every year and an associated small increase in phosphorus has been observed following rewetting. The water is very clear within the STA, and staff feel this may be related to the periodic dry out. Cell 3 is a mixture of emergent vegetation, with a small amount of Brazilian pepper, which is effectively controlled through periodic herbicide application. Cell 5 has a mixture of paragrass, some SAV and seasonal periphyton communities. Cattail has been observed to be expanding in Cell 5, and staff are considering whether to control the spread using herbicide to avoid losing the SAV.

Concepts of disturbance management, e.g., burning and draw down, are currently being added to the vegetation management tool kit. A proposal by Rodgers (2004) identifies several thousand acres for burning in the near future, including 245 acres in Cell 3. Draw down, and potential dry outs, may be investigated for P removal enhancements, vegetation health and soil consolidation benefits. Presently, a formal vegetation management plan does not exist for STA-6 as exists for STA-1E and STA-3/4; there may be a benefit to developing one.

A summary of existing vegetation in STA-6 is presented in Figure 8-4 and Table 8-3.

Table 8-3. Summary of vegetation in STA-6 (SWMD 2004).

Habitat	Acres	% Cover
Open water	220.0	25.4
Emergent with open water (50/50)	10.6	1.2
Emergent	493.4	56.9
Floating	8.0	0.9
Shrub	134.4	15.5
Other	0.8	0.1
Total	867.2	100.0

Figure 8-4. Vegetation map of STA-6 (SFWMD 2004).

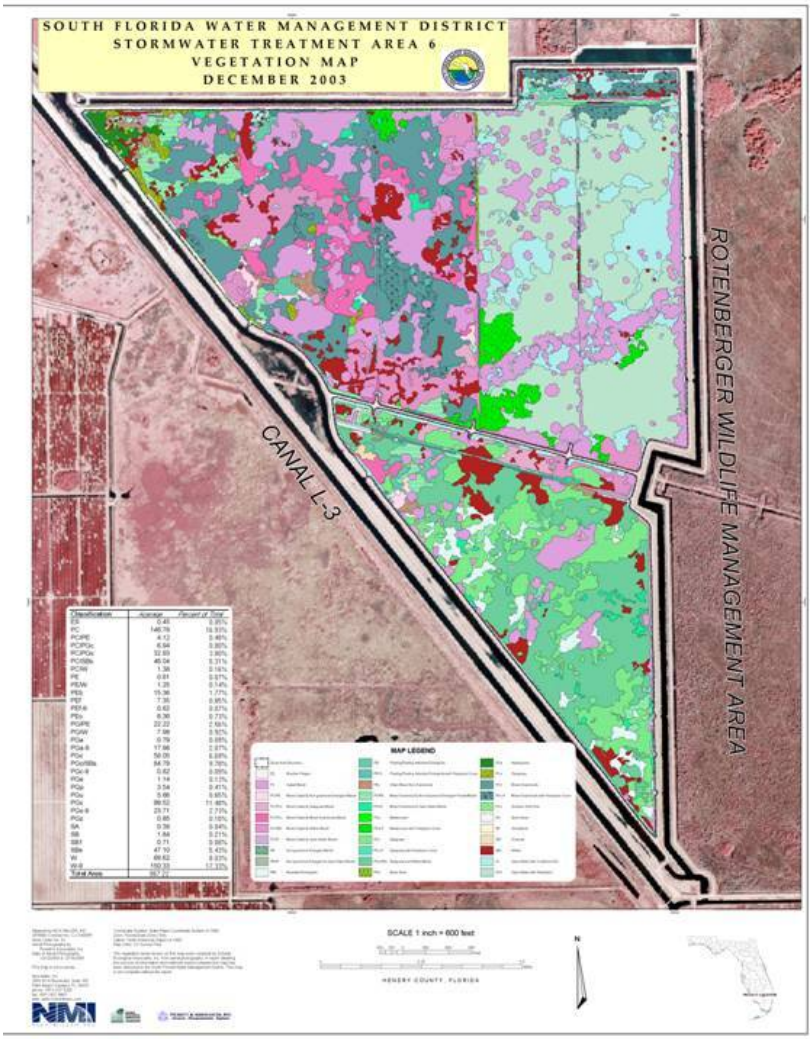

Classification	Acerage	Percent of Total
ES	0.45	0.05%
PC	146.79	16.93%
PC/PE	4.12	0.48%
PC/PGc	6.94	0.80%
PC/PGx	32.93	3.80%
PC/SBs	46.04	5.31%
PC/W	1.38	0.16%
PE	0.61	0.07%
PE/W	1.25	0.14%
PEb	15.36	1.77%
PEf	7.35	0.85%
PEf-9	0.62	0.07%
PEo	6.36	0.73%
PG/PE	22.22	2.56%
PG/W	7.99	0.92%
PGa	0.79	0.09%
PGa-9	17.98	2.07%
PGc	58.05	6.69%
PGc/SBs	84.79	9.78%
PGc-9	0.82	0.09%
PGe	1.14	0.13%
PGp	3.54	0.41%
PGu	5.66	0.65%
PGx	99.52	11.48%
PGx-9	23.71	2.73%
PGz	0.85	0.10%
SA	0.38	0.04%
SB	1.84	0.21%
SB1	0.71	0.08%
SBs	47.10	5.43%
W	69.62	8.03%
W-9	150.33	17.33%
Total Area	867.22	

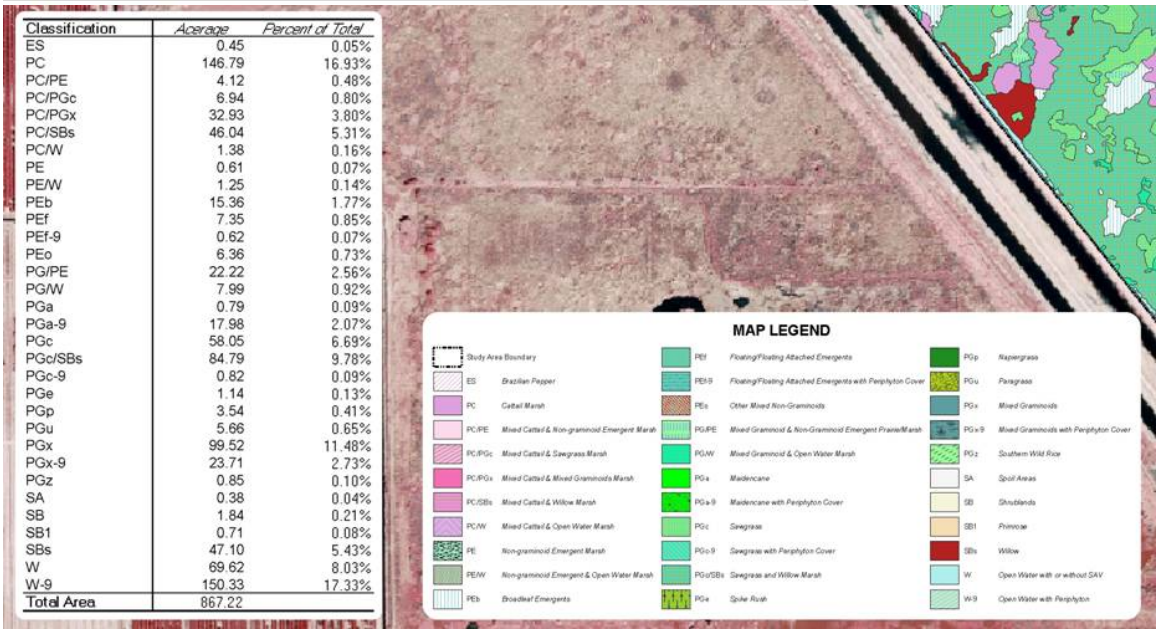

8.5 STA Enhancements

A schematic of the enhanced STA-6 is presented in Figure 8-6, which shows the additional Section 2 treatment cells 2 & 4.

Figure 8-6. Schematic of STA-6 enhancements (not to scale).

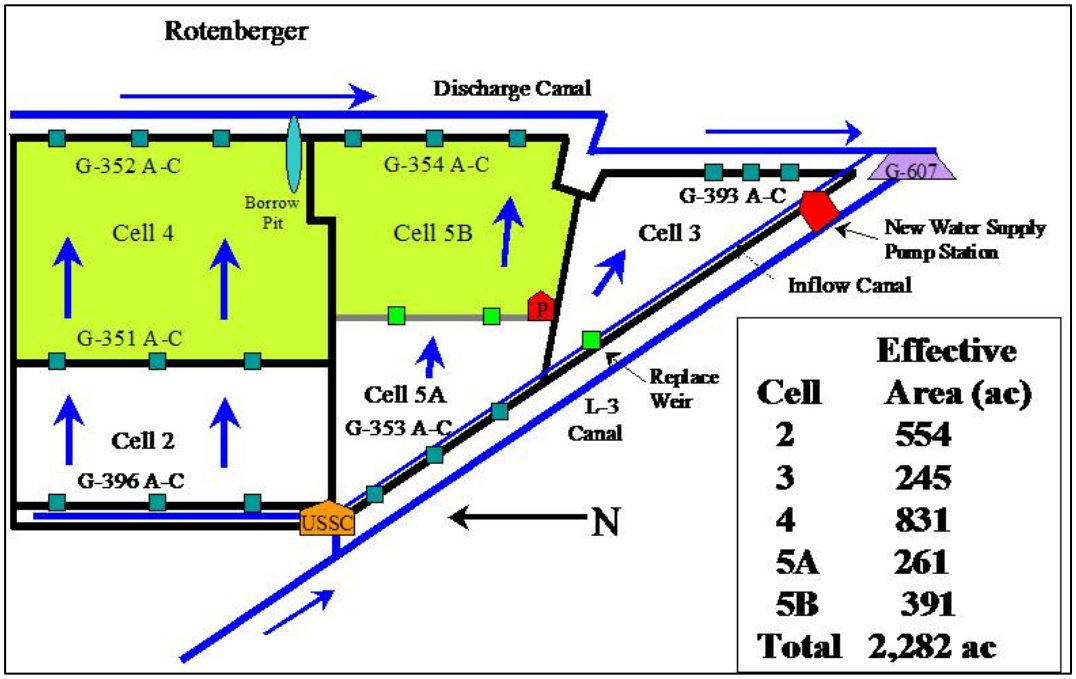

The major vegetation management activity planned for the enhancement of STA-6 is conversion of emergent vegetation to SAV in the new Cell 5B (after the new Section 2 is in flow-through operation).

Many lessons learned from experiences at the STAs and other wetland systems will be incorporated into these activities, including:

- the use of a combination of herbicide, mowing and fire as part of the vegetation conversion procedure
- the use of emergent vegetation strips within an SAV treatment cell
- leaving pockets of SAV within emergent cells, and if manageable, small pockets of FAV, although the size threshold (e.g., 5 acres of 100 acres) is not known
- harvesting SAV from nearby donor sites (where applicable) and transplanting to areas targeted for SAV to accelerate the conversion from emergent to SAV.

STA-6 has been performing exceptionally well, averaging around 20 ppb over the life of the project, with from 10-25% of the cell discharge grab samples are at or below 10 ppb. This performance is similar to the expected performance after the enhancements, so the District is proceeding cautiously in making the large-scale conversion to SAV in the new cell 5B, particularly without experience in large-scale conversion from emergent to SAV communities.

9 Summary

Effective management of both desirable and non-desirable vegetation within the Stormwater Treatment Areas (STAs) is critical to achieving and sustaining long-term phosphorus reduction goals for the Everglades. The South Florida Water Management District (District) has amassed what is arguably the most comprehensive experience and knowledge base of vegetation management in large-scale treatment wetland, developed over the last fifteen years.

Consideration of vegetation management activities was incorporated into the STA design phase, while field activities begin with land acquisition and extended through construction, start-up (i.e., after initial inundation and before flow-through operation), and normal operation and maintenance phases. As the District implements the STA enhancements described in the Long-Term Plan, the lessons learned from prior vegetation management activities will be evaluated and refined in order to convert approximately 10,000 acres of emergent vegetation to submerged aquatic vegetation (SAV). In order to assist with this evaluation process, and to serve as a preliminary "lessons learned" of vegetation management practices, this report summarizes many of the various activities used to manage vegetation communities within the STAs over the last fifteen years.

Key findings are summarized below.

- The most timely and effective growth of treatment vegetation occurred when vegetation management was explicitly considered during the design phase, e.g., to insist that the construction contractor retain dewatering volumes on site during construction of STA-3/4.
- Land preparation prior to initial inundation appeared to be the most dominant factor in effectively establishing desirable vegetation communities in the STA prior to flow-through operations.
- Site-specific factors such as antecedent crop type (and associated fertilizer practice), soil type and depth, and ability to control water levels, influenced the effectiveness of the various land preparation techniques.
- The most effective control of non-desirable vegetation was achieved through proactive vegetation management, i.e., keeping problems from getting out of hand, beginning soon after the land was acquired, and continuing through normal operations and maintenance. This was particularly critical for FAV.

Future considerations:

- For future STAs, site-specific combinations of mowing, judicial application of herbicide, and burning appears to be the most effective vegetation practices prior to inundation.
- For those treatment cells presently in emergent communities and scheduled for conversion to SAV, a combination of mowing, judicial application of herbicide,

and burning may be effective to remove the existing biomass. Where donor sites free of hydrilla are nearby, aerial transport of SAV may be effective in rapidly establishing the desirable SAV community.

- A mosaic of vegetation communities (i.e., mixed marsh of emergent and SAV vegetation) may be more desirable than a monoculture of, say, SAV. This diversity may increase the resiliency of the cells to upset, such as occurred in Cell 5 of STA-1W during the September 2004 hurricanes. Determining the proper mix will require additional investigations. In the interim, strips of emergent vegetation 40 to 50-ft wide and spaced 500 – 1000 ft on center (or adjacent to remnant roads/canals) are being left in those cells being converted from emergent to SAV.
- Tussocks (i.e., rooted vegetation floating on peat rafts) should be removed whenever possible. Removal by draglines was slow but effective, and limited to the reach of the boom. Draglines positioned nearby for use during opportune work periods by field station staff may be desirable. On-site storage for dewatering prior to transport off-site (perhaps to adjacent farmers) should be further evaluated.
- The District is interested in developing experience in disturbance management (e.g., by fire, draw down, harvesting) based on the potential to yield more robust and resilient vegetation, which may lead to improved performance. Periodic draw down may also consolidate the floc layer and peat.
- Vegetation management plans should be completed for each STA. They should be reviewed annually and updated as needed.

Scientific questions that need to be addressed for successful vegetation management in the STAs

Despite the comprehensive experience base developed over the last fifteen years, additional scientific and practical questions remain, hence, there is a continuing need for active science-based investigations of various vegetation management practices to further evaluate the most effective means to achieve and maintain the long-term water quality goals for the Everglades STAs. A current list of relevant questions and issues was compiled by Lou Toth and is presented below.

Vegetation Characteristics Needed to Maximize Performance (i.e., Nutrient Removal)

What are the desired vegetation species of emergent and submergent cells?

Are monospecific or mixed species communities desired?

What is the desired total (% of cell) and relative (% of vegetation community) spatial coverage of the desired species?

Are there target/desired densities for emergent species?

Is there a target/desired standing crop biomass for submergent species?

What conditions lead to tussock development?

Observations in STA 3/4 suggest significant differences in periphyton biomass between areas that have been treated with herbicides, burned, and left as emergent vegetation. What is the expected/desired role of periphyton in the STAs during start-up, and for long-term performance, and how does this role relate or vary with macrophyte (submerged, emergent) growth characteristics?

Nuisance/Exotic Species

Are the following exotic species undesirable in emergent cells either because of poor performance or proximity to the Everglades: torpedograss, paragrass, primrose willow?

Are woody shrubs like willow undesirable?

Are isolated pockets of water hyacinth and/or water lettuce that are completely surrounded by emergent vegetation undesirable?

Is *Hydrilla* undesirable? If so, what conditions (water levels, nutrient concentrations) allow desired submerged species to resist invasion and dominance by *Hydrilla*?

Can *Hydrilla* be controlled with diligent maintenance control from the beginning?

Long-term Wetland Function

What is the rate of biomass (i.e., plant litter) accumulation in emergent and submergent cells? Does this accumulation affect performance? If so, when?

Will STAs reach a saturation point when revitalization will be needed to restore their nutrient removal efficiency? If so, when?

Management Measures

It has been suggested that prescribed fire may be a useful management tool for maintaining STA performance. What specific performance measures can be used to experimentally evaluate the value of prescribed fires in the STAs?

Finally, it is intended that this initial effort to document vegetation management practices be periodically updated as new information is gained.

10 References

Chimney M. and Goforth G. (2000). Environmental impacts to the Everglades eco-system: A historical perspective and restoration strategies. In: Proceedings 7th International Conference on Wetland Systems for Water Pollution Control, University of Florida, Gainesville, Florida, pp. 159-168.

Chimney M. and Goforth G. (in press). History and description of the Everglades Nutrient Removal Project.

Davis S., July 1988, draft "Conceptual Design, EAA Flow-way Research and Development Program" SFWMD.

Fogarty-Kellis E., J. Newman, W. Wagner 2004. STA-2, Cell 3 Hydrilla Study.

Goforth G., 2000, Surmounting the engineering challenges of Everglades restoration, In: Proceedings 7th International Conference on Wetland Systems for Water Pollution Control, University of Florida, Gainesville, Florida, pp. 697-705.

Goforth, G., J. B. Jackson, L. Fink, 1994, "Restoring the Everglades," Civil Engineering.

Guardo, M., L. Fink, T.D. Fontaine, S. Newman, M. J. Chimney, R. Bearzotti, and G. Goforth, 1995, Large-Scale Constructed Wetlands for Nutrient Removal from Stormwater Runoff: An Everglades Restoration Project. Environmental Mgmt. Vol. 19, No. 6, pp. 879-889.

Lake Okeechobee Technical Advisory Council 1988. Draft Interim Report Volume 1. March 1988.

LaRoche F. 1999. Memo to Gordon Baker "Torpedograss Control in ENR".

Rodgers, L. 2004. Proposed Stormwater Treatment Area Prescribed Burn Program. November 2004.

Pant, H. K. and K. R. Reddy 2001. Wetlands and Aquatic Processes; Hydrologic Influence on Stability of Organic Phosphorus in Wetland Detritus. Journal of Environmental Quality, 30:668-674, 2001.

Rodgers 2005. Personal communication (e-mail).

Serbesof-King 2004. Stormwater Treatment Area 1E Vegetation Management Plan, June 23, 2004.

SFWMD 1986. Draft Summary of Staff Recommendations to the Lake Okeechobee Technical Advisory Council. September 1986.

SFWMD 1991. Management Plan for Everglades Nutrient Removal Project, prepared by the Project Management Division, Construction management Department, SFWMD, September 1991.

SFWMD 2003. Draft Site Management Plan Stormwater Treatment Area-3/4.

SFWMD 2004. Vegetation maps were prepared by the Everglades Division of the District's Watershed Management Department.

SFWMD 2004. Long-Term Plan for Achieving Water Quality Goals, Everglades Protection Area Tributary Basins, November 2004 (Revised).

SFWMD 2004. Draft Stormwater Treatment Area-1 West Recover Plan, November 23, 2004.

Toth, Lou 2005. Report to DEP on the demonstration project funded by a cost-share grant agreement (No. G0040) between the District and the Florida Department of Environmental Protection. The grant funding is being provided by the U.S. Environmental Protection Agency.

Wilson 2004, personal communication regarding allelopathic property of sugar cane.